SERVICE MANUAL

AE-2B CHASSIS

MODEL	COMMANDER	DEST.	CHASSIS NO.
KV-E2951A	RM-831	Italian	SCC-G59K-A
KV-E2951B	RM-831	French	SCC-G57J-A
KV-E2951D	RM-831	AEP	SCC-G45K-A
KV-E2953E	RM-831	Spanish	SCC-G56J-A
KV-E2951K	RM-831	OIRT	SCC-G73F-A

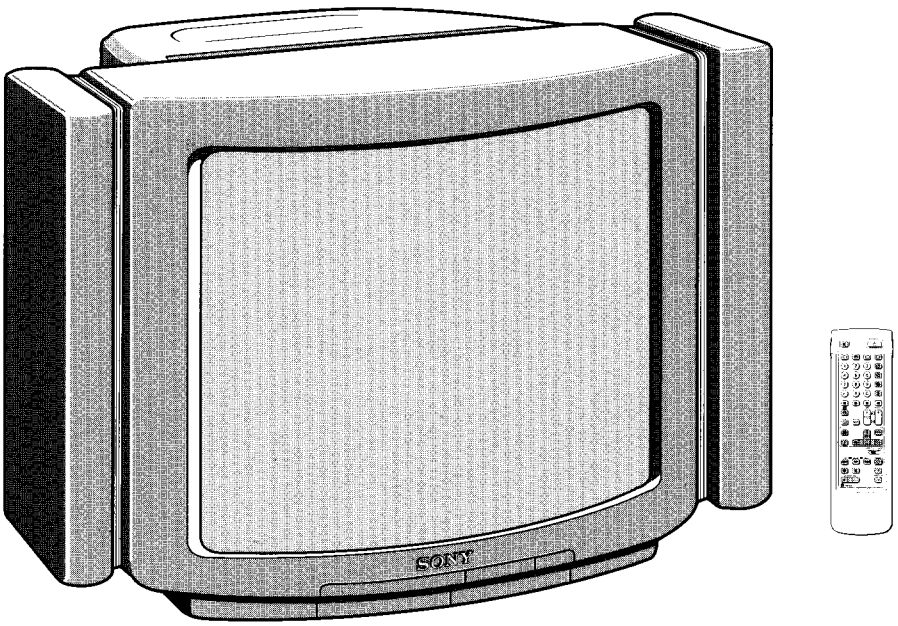

MICROFILM

TRINITRON® COLOR TV

SONY®

ITEM MODEL	Television system	Stereo system	Channel coverage	Color system
Italian	B/G/H, D/K	GERMAN Stereo	ITALIA VHF:A-H2 (C) UHF:21-69 PAL B/G/H VHF:E2-E12 UHF:E21-E69 CABLE TV (1):S1-S41 CABLE TV (2):S01-S05, M1-M10, U1-U10 D/K VHF:R01-R12 UHF:R21-R69	PAL, NTSC4.43, NTSC3.58 (VIDEO IN)
French	B/G/H, D/K L, I	GERMAN Stereo	L VHF:F02-F10 UHF:F21-F60 CABLE:B-Q B/G/H VHF:E2-E12 UHF:E21-E69 CABLE TV (1):S1-S41 CABLE TV (2):S01-S05, M1-M10, U1-U10 ITALIA VHF:A-H2 (C) UHF:21-69 D/K VHF:R01-R12 UHF:R21-R69 I UHF:B21-B69	PAL, SECAM NTSC4.43, NTSC3.58 (VIDEO IN)
AEP	B/G/H, D/K	GERMAN Stereo	PAL B/G/H VHF:E2-E12 UHF:E21-E69 CABLE TV (1):S1-S41 CABLE TV (2):S01-S05, M1-M10, U1-U10 ITALIA VHF:A-H2 (C) UHF:21-69 D/K VHF:R01-R12 UHF:R21-R69	PAL, SECAM NTSC4.43, NTSC3.58 (VIDEO IN)
Spanish	B/G/H, D/K	GERMAN/NICAM Stereo	PAL B/G VHF:E2-E12 UHF:E21-E69 CABLE TV (1):S1-S41 CABLE TV (2):S01-S05, M1-M10, U1-U10 ITALIA VHF:A-H2 (C) UHF:21-69 D/K VHF:R01-R12 UHF:R21-R69	PAL NTSC4.43, NTSC3.58 (VIDEO IN)
OIRT	B/G/H, D/K	EASTERN Stereo	PAL B/G/H VHF:E2-E12 UHF:E21-E69 CABLE TV (1):S1-S41 CABLE TV (2):S01-S05, M1-M10, U1-U10 ITALIA VHF:A-H2 (C) UHF:21-69 D/K VHF:R01-R12 UHF:R21-R69	PAL, SECAM NTSC4.43, NTSC3.58 (VIDEO IN)

MODEL	Italian	French	AEP	Spanish	OIRT
Power Consumption	116W	129Wh	133W	137W	133W

SPECIFICATIONS

Picture tube — Super Trinitron
Approx. 72 cm (29 inches)
(Approx. 68 cm picture measured diagonally)
110° -deflection

Input/Output Terminals

[REAR]

→ 1 21-pin Euro connector
(CENELEC standard)
Inputs for audio and video signals
• inputs for RGB
• outputs of TV video and audio signals

→ 2/→S 2 21-pin Euro connector
• inputs for audio and video signals
• inputs for S video
• outputs for audio and video signals
(selectable)

→ 4/→S 4 21-pin Euro connector
• inputs for audio and video signals
• inputs for S video
• outputs for audio and video signals
(monitor out)

→S 2, →S 4 S video inputs
• 4 pin DIN
→ Audio inputs (L, R) -phono jacks
S→ S video output - 4 pin DIN
→ Audio outputs - phono jacks
→ Audio outputs (variable) - phono jacks
External speaker terminals : 2 pin DIN
Woofer terminal : 2-pin

Item \ Model name	KV-E2951A	KV-E2951B	KV-E2951D	KV-E2953E	KV-E2951K
Pal Comb	OFF	OFF	OFF	OFF	OFF
PIP	ON	ON	ON	ON	ON
RGB Priority	ON	ON	OFF	OFF	OFF
Woofer Box	ON	ON	ON	ON	ON
Just 60 Progr. (refer to I.)	OFF	OFF	OFF	OFF	OFF
Scart 1	ON	ON	ON	ON	ON
Scart 2	ON	ON	ON	ON	ON
Front in (3)	ON	ON	ON	ON	ON
Scart 4	ON	ON	ON	ON	ON
Dyn. Convergence	OFF	OFF	OFF	OFF	OFF
Projector	OFF	OFF	OFF	OFF	OFF
AKB in 16:9 mode	ON	ON	ON	ON	ON
Norm B/G	ON	ON	ON	ON	ON
Norm I	OFF	ON	OFF	OFF	OFF
Norm D/K	ON	ON	ON	ON	ON
Norm AUS	OFF	OFF	OFF	OFF	OFF
Norm L	OFF	ON	OFF	OFF	OFF
Norm SAT	OFF	OFF	OFF	OFF	OFF
Norm M	OFF	OFF	OFF	OFF	OFF
Bass Offset	0	0	0	0	0
Treble Offset	0	0	0	0	0
DSP / EQualizer	OFF	OFF	OFF	OFF	OFF
DOLBY PROLOGIC	OFF	OFF	OFF	OFF	OFF
NICAM	ON	ON	ON	ON	ON
Double page text (refer to II.)	OFF	OFF	OFF	OFF	OFF
nat-opt byte (refer to IV.)	3	3	3	3	5
Language Preset	Italiano	Francais	Deutsch	None	OIRT

[FRONT]

- 3 Video input-phono jack
- Audio input-phono jacks
- 3 S video input 4-pin DIN
- Headphone jack : Stereo minijack

Sound output	2x11W Side Speakers (RMS) 25W Woofer (RMS) 2x25W Side Speaker (Music)
Power reqirement	220-240V
Dimensions	Approx. 802 x 624 x 525 mm
Weight	Approx. 55 kg
Supplied accessories	RM-831 Remote Commander (1) IEC designation R6 batteries (2)
Other features	NICAM, FASTTEXT

[RM-831]

Remote control system	infrared control
Power requirements	1.5V dc 1 battery IEC designation R6 (size AA)
Dimentions	Approx. 65 x 225 x 21 mm (w/h/d)
Weight	Approx. 157g (Not including Batteries)

Design and specifications are subject to change without notice.

21 pin connector (1 2 / 4)

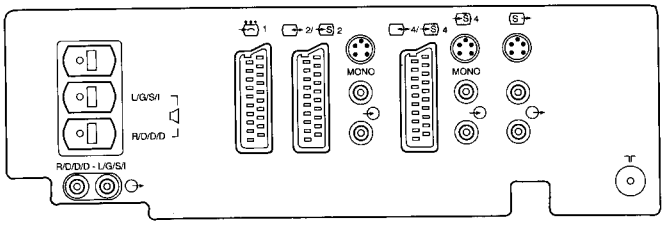

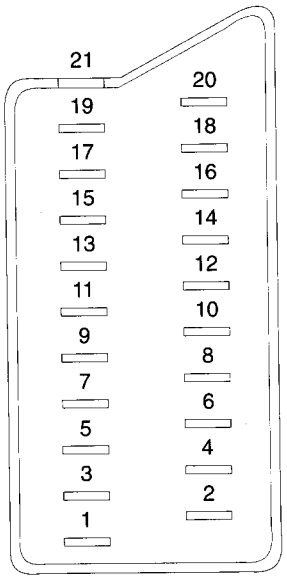

Pin No.	1	2	4	Signal	Signal level
1	○	○	○	Audio output B (right)	Standard Level : 0.5V rms Output impedance : Less than 1kohm*
2	○	○	○	Audio input B (right)	Standard Level : 0.5V rms Input impedance : More than 10kohm*
3	○	○	○	Audio output A (left)	Standard Level : 0.5V rms Output impedance : Less than 1kohm*
4	○	○	○	Ground (audio)	
5	○	○	○	Ground (blue)	
6	○	○	○	Audio intput A (left)	Standard Level : 0.5V rms Input impedance : More than 10kohm*
7	○	●	●	Blue input	0.7 ± 3dB, 7.5 ohms, positive
8	○	○	○	Function select (AV control)	High state (9.5 - 12V) : Part mode Low state (0 - 2V) : TV mode Input impedance : More than 10kohms Input capacitance : Less than 2nF
9	○	○	○	Grounf (green)	
10	○	○	○	Open	
11	○	●	●	Green	Green signal : 0.7 ± 3dB, 75 ohms, positive
12	○	○	○	Open	
13	○	○	○	Ground (red)	
14	○	○	○	Ground(blanking)	
15	○	–	–	Red input	0.7V ± 3dB, 75 ohms, positive
	–	○	○	(S signal) croma input	0.3V ± 3dB, 75 ohms, positive
16	○	●	●	Blanking input (Ys signal)	High state (1 - 3V) Low state (0 - 0.4V) Input impedance : 75ohms
17	○	○	○	Ground (video output)	
18	○	○	○	Ground (video input)	
19	○	○	○	Video output	1V ± 3dB,75ohms, positive sync:0.3V(-3+10dB)
20	○	–	–	Video input	1V ± 3dB,75ohms, positive sync:0.3V(-3+10dB)
	–	○	○	Video input Y (S signal)	1V ± 3dB,75ohms, positive sync:0.3V(-3+10dB)
21	○	○	○	Common ground (plug, sheild)	

○ Connected ● Not Connected (open) * at 20Hz - 20kHz

TABLE OF CONTENTS

Section	Title	Page
1. GENERAL		
	Overview	6
	Step 2 Connection	7
	Step 3 Tuning in to TV stations	7
	Additional Presetting Functions	9
	Watching the TV	10
	Adjusting and Setting the TV using the Menu	11
	PIP (Picture in Picture)	12
	Teletext	13
	Connecting and Operating Optional Equipment	14
2. DISASSEMBLY		
2-1.	Rear Cover Removal	16
2-2.	Chassis Assy Removal	16
2-3.	Service Position	17
2-4.	Extension Board	17
2-5.	F Bracket Removal	18
2-6.	J and K Boards Removal	18
2-7.	P1 Board Removal	18
2-8-1.	Wire Dressing	19
2-8-2.	Wire Dressing	19
2-9.	Picture Tube Removal	20
3. SET-UP ADJUSTMENTS		
3-1.	Beam Landing	21
3-2.	Convergence	22
3-3.	Focus	24
3-4.	White Balance	24
4. CIRCUIT ADJUSTMENTS		
4-1.	Electrical Adjustments	25
4-2.	Volume Electrical Adjustments	29
4-3.	Test Mode 2 :	30
4-4.	Error Message	31
4-5.	Error II C Bus Diagnosis System in AE-2B Chassis Available	31

CAUTION

SHORT CIRCUIT THE ANODE OF THE PICTURE TUBE AND THE ANODE CAP TO THE METAL CHASSIS, CRT SHIELD, OR CARBON PAINTED ON THE CRT, AFTER REMOVAL OF THE ANODE CAP.

WARNING !!

AN ISOLATING TRANSFORMER SHOULD BE USED DURING ANY SERVICE WORK TO AVOID POSSIBLE SHOCK HAZARD, DUE TO A LIVE CHASSIS. THE CHASSIS OF THIS RECEIVER IS DIRECTLY CONNECTED TO THE AC POWER LINE.

SAFETY-RELATED COMPONENT WARNING !!

COMPONENTS IDENTIFIED BY SHADING AND MARKED ⚠ ON THE SCHEMATIC DIAGRAMS, EXPLODED VIEWS AND IN THE PARTS LIST ARE CRITICAL FOR SAFE OPERATION. REPLACE THESE COMPONENTS WITH SONY PARTS WHOSE PART NUMBERS APPEAR AS SHOWN IN THIS MANUAL OR IN SUPPLIMENTS PUBLISHED BY SONY.

ATTENTION

APRES AVOIR DECONNECTE LE CAP DE L'ANODE, COURT-CIRCUITER L'ANODE DU TUBE CATHODIQUE ET CELUI DE L'ANODE DU CAP AU CHASSIS METALLIQUE DE L'APPAREIL, OU AU COUCHE DE CARBONE PEINTE SUR LE TUBE CATHODIQUE OU AU BLINDAGE DU TUBE CATHODIQUE.

ATTENTION !!

AFIN D'EVITER TOUT RISQUE D'ELECTROCUTION PROVENANT D'UN CHÁSSIS SOUS TENSION, UN TRANSFORMATEUR D'ISOLEMENT DOIT ETRE UTILISÈ LORS DE TOUT DÈPANNAGE. LE CHÁSSIS DE CE RÈCEPTEUR EST DIRECTEMENT RACCORDÈ Á L'ALIMENTATION SECTEUR.

ATTENTION AUX COMPOSANTS RELATIFS Á LA SÈCURITÈ !!

LES COMPOSANTS IDENTIFIÈS PAR UNE TRAME ET PAR UNE MARQUE ⚠ SUR LES SCHÈMAS DE PRINCIPE, LES VUES EXPLOSÈES ET LES LISTES DE PIECES SONT D'UNE IMPORTANCE CRITIQUE POUR LA SÈCURITÈ DU FONCTIONNEMENT, NE LES REMPLACER QUE PAR DES COMPOSANTS SONY DONT LE NUMÈRO DE PIÈCE EST INDIQUÈ DANS LE PRÈSENT MANUEL OU DANS DES SUPPLÈMENTS PUBLIÈS PAR SONY.

SECTION 1
GENERAL

The operating instructions mentioned here are partial abstracts from the Operating Instruction Manual. The page numbers of the Operating Instruction Manual remein as in the manual.

Overview

This section briefly describes the buttons and controls on the TV set and on the Remote Commander. For more information, refer to the pages given next to each description.

TV set - front

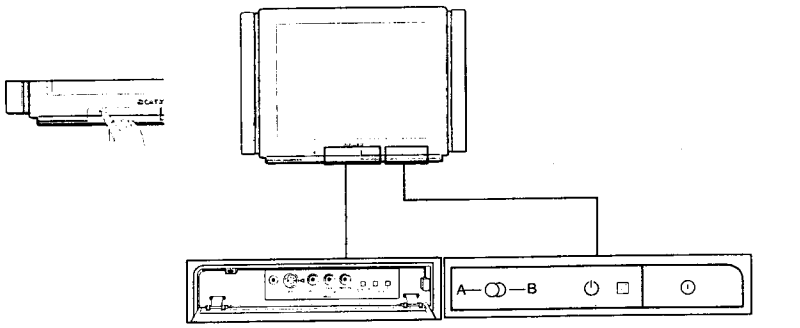

Symbol	Name	Refer to page
⏻	Main power switch	42
⏻	Standby indicator	42
A-◯-B	Stereo A/B indicators	44
Ω	Headphones jack	51
S 3, 3, 3	Input jacks (S-video/video/audio)	51
P→◿→	Function selector (Programme/volume/input)	42
– +	Adjustment buttons for function selector	42

Remote Commander RM-831

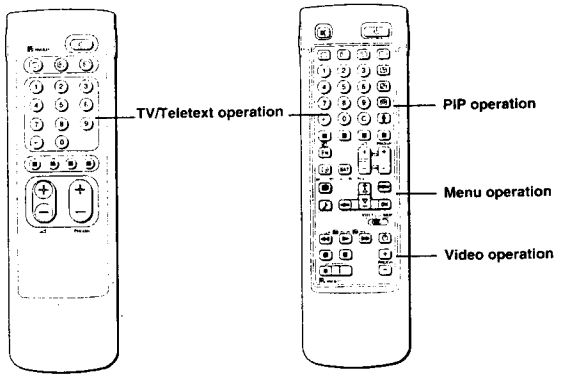

Simple side

Full-Function side

Note
The SAT button does not operate with this TV.

TV/Teletext-operation

Symbol	Name	Refer to Page
🔇	Mute on/off button	43
⏻	Standby button	42
▭	TV power on/TV mode selector button	42
▤	Teletext button	43
⊕	Input mode selector	43
⊖	Output mode selector	51
1,2,3,4,5,6, 7,8,9, and 0	Number buttons	42
–/– –	Double-digit entering button	42
C	Direct channel entering button	39
◿+/–	Volume control button	42
PROGR +/–	Programme selectors	42
1 2	Teletext page access buttons	47
●	Picture adjustment button	44
♪	Sound adjustment button	44
⊕	On-screen display button	43
⊕	Teletext hold button	47
⊙	Time display button	43
■■■■	Fastext buttons	47

PIP (Picture in picture) operation

Symbol	Name	Refer to Page
◔	PIP on/off button	46
↑	PIP source selector	46
⊘	Swap button	46
◔	PIP position changing button	46

Menu operation

Symbol	Name	Refer to Page
MENU	Menu on / off button	36
△+/▽–	Select buttons	36
OK	OK (confirming) button	36
←	Back button	36

Video operation

Symbol	Name	Refer to Page
VTR1/2/3 MDP	Video equipment selector	52
◀◀ ▶ ▶▶ ■ ❚❚ ● ⏻ PROGR +/–	Video equipment operation buttons	52

GB

Step 2 Connection

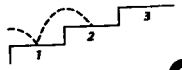

❶ Connect the speakers and the woofer

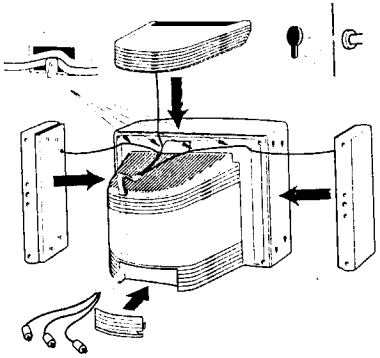

Hook the two side speakers (L = left, R = right) into the openings on both sides of the TV. Clip the cables of the speakers into the hooks on top of the set and pass the cables down through the opening at the rear of the TV (see above illustration).
Plug the connectors of the speaker cords into the rear of the TV (L/G/S/I for the left box, R/D/D/D for the right box with the longer cable).

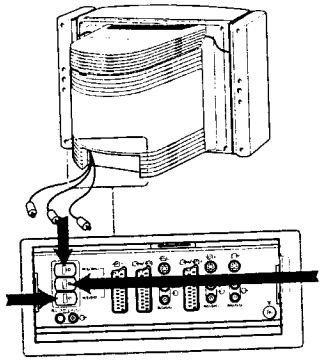

Pass the cable of the woofer down through the opening at the rear of the set. Place the woofer on top of the TV and plug the connector of the woofer into the rear of the TV (W/G/W/G).

Safety Information: If the side speakers are not connected to the set, make sure to close the side openings using the supplied plugs. Never insert any objects through the openings.

❷ Connect the aerial

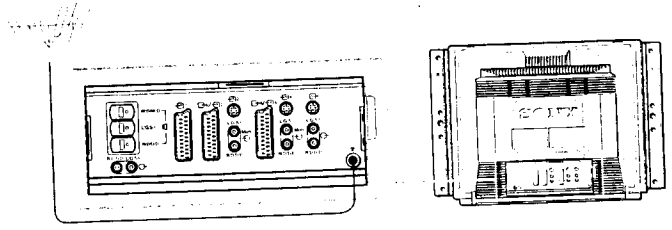

Fit an IEC aerial connector attached to 75-ohm coaxial cable (not supplied) to the Ψ socket at the rear of the TV.

GB

Step 3 Tuning in to TV Stations

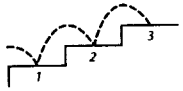

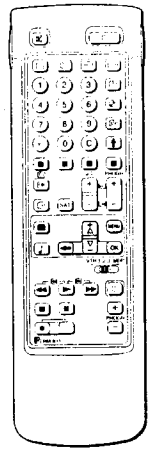

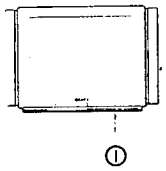

Once you have set up the TV, you can choose the language of the menu. Then you should preset the channels (up to 100 channels) by choosing either the automatic or manual method.

The automatic method is easier if you want to preset all receivable channels at once. Use the manual method if you only have a few channels and want to preset channels one by one. The manual method is also convenient for allocating programme numbers to various video input sources.

Before you begin

- Check that the Full-Function side of the Remote Commander is visible.
- Locate Menu operation buttons on the Remote Commander. They are shaded in the illustration at the left.

❶ Choose a language

1 Depress ⏻ on the TV.
The TV will switch on. If the standby indicator on the TV is lit, press ▢ or a number button on the Remote Commander.

2 Press the MENU button.
The »LANGUAGE« menu appears. (See Fig.1)

3 Select the language you want with △+ or ▽– and then press OK.

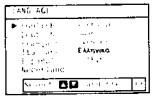

Fig. 1.

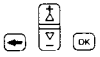

❷ Display the Menu

1 Press the ← button.
The main menu appears. (See Fig. 2)

Now, choose one of the methods described overleaf:
"Preset Channels Automatically"

or

"Preset Channels Manually".

Fig. 2.

To go back to main menu:
Keep pressing ←.

To go back to the normal TV picture:
Press MENU. Normal TV picture will be restored after one minute if menu functions are not selected.

Note on the Demo function:
If you choose Demo on the main menu, you can see a sequential demonstration of the menu functions.

Press MENU to stop the function.

❸ Preset channels automatically

With this method, you can preset all receivable channels at once.

To stop automatic channel presetting:
Press ⬅ on the Remote Commander.

Notes:
• After presetting the channels automatically, you can check which channels are stored on which programme positions. For details, see "Using the Programme Table" on page 44.

• You can sort the programme positions to have them appear on screen in the order you like. For details, see "Sorting Programme Positions" on page 39.

Note:
Programme names are automatically taken from Teletext if available. If not, please refer to page 40 »Captioning a Station name« for more information.

1 Select »Preset« with △+ or ▽– and press OK.
The »PRESET« menu appears. (See Fig. 3.)

2 Select »Auto Programme« with △+ or ▽– and press OK.
The »AUTO PROGRAMME« menu appears. (See Fig. 4.)

3 Press OK.
Select if necessary the TV broadcast system with △+ or ▽– and press OK. (B/G for western European countries, D/K for eastern European countries) The first element of the "PROG" number will be highlighted.

4 Select the programme (number button) from which you want to start presetting. Select the first element of the double-digit number with △+ or ▽– or the number buttons (e.g. For "04", select "0" here) and press OK.
The second element of "PROG" will be highlighted.

5 Select the second element of the double-digit number with △+ or ▽– or the number buttons (e.g. For "04", select "4" here) (See Fig. 5.) and press OK.

6 Select "C" or "S" with △+ or ▽– and press OK.
The automatic channel presetting starts.
When presetting is finished the preset menu reappears.
All available channels are now stored on successive number buttons. (Press menu to restore normal TV picture.)

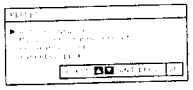
Fig. 3.

Fig. 4.

Fig. 5.

❸ Preset channels manually

Use this method if there are only a few channels in your area to preset or if you want to preset channels one by one. You may also allocate programme numbers to various video input sources.

If you have made a mistake:
Press ⬅ to go back to the previous position.
To go back to main menu:
Keep pressing ⬅.
To go back to the normal TV picture:
Press MENU.

1 Select »Preset« with △+ or ▽– and press OK.
The »PRESET« menu appears. (See Fig. 6.)

2 Select »Manual Programme preset« with △+ or ▽– and press OK.
The »MANUAL PROGRAMME PRESET« menu appears. (See Fig. 7.)

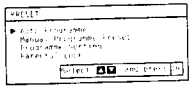
Fig. 6.

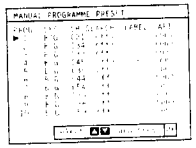
Fig. 7.

GB

To tune in a channel by frequency:
After selecting F in step 6, enter three digits using the number buttons.
Press OK.

3 Using △+ or ▽–, select the programme position (number button) to which you want to preset a channel, and press OK.

4 Keep pressing ▽– to select programme numbers higher than 10.

5 Select if necessary the TV broadcast system (B/G for western European countries, D/K for eastern European countries) or a video input source (EXT) with △+ or ▽–.
Then press OK. The CH position will be highlighted. (See Fig. 8.)

6 Using △+ or ▽–, select C (to preset a regular channel), or F (to tune in by frequency), or S (cable channel) and press OK.
The first element of the "CH" number will be highlighted.
If you have selected EXT in step 5, select the video input source with △+ or ▽–. (See Fig. 9.)

There are two ways to preset channels. If you know the channel number, go to step "7-Manual",

or

if you don't know the channel number, go to step "7- Search".

Fig.8.

Fig.9.

7 ***Manual***

-a Select the first element of the "CH" number with △+ / ▽– or the number buttons and press OK.
The second element of the "CH" number will be highlighted.

-b Select the second element of the number with △+ / ▽– or the number buttons.
The selected number appears. (See Fig. 10.)

Fig.10.

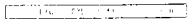
Fig.11.

-c Press OK
The "SEARCH" position is highlighted and the selected channel is now stored. (See Fig. 11.)

-d Press OK until the cursor appears by the next programme position.

-e Repeat steps 3 to 7 to preset other channels.

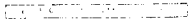
Fig.12.

7 ***Search***

-a Press OK repeatedly until the colour of the SEARCH position changes.

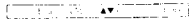
Fig.13.

-b Start searching for the channel with △+ (up) or ▽– (down).
The CH position changes colour. (See Fig. 12.)
The CH number starts counting up or downwards. When a channel is found, it stops. (See Fig. 13.)

-c Press OK if you want to store this channel. If not, press △+ or ▽– to continue channel searching.

-d Press OK until the cursor appears by the next programme position.

-e Repeat steps 3 to 7 to preset other channels.

Additional Presetting Functions

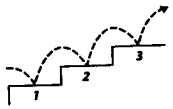

This section shows you additional presetting functions such as sorting or skipping programme positions, captioning a station name, manual fine-tuning, and using the parental lock.

Before you begin

- Check that the Full Function side of the Remote Commander is visible
- Locate the Menu operation buttons.

PROGRAMME SORTING

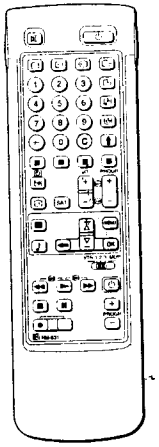

For programme positions beyond 15:
The display scrolls automatically.

If you have made a mistake:
Press ⬅ to go back to the previous position.
To go back to main menu:
Keep pressing ⬅.
To go back to the normal TV picture:
Press MENU.

Sorting Programme Positions

With this function, you can sort the programme positions to a preferable order.

1 Press MENU to display the main menu.
2 Select »Preset« with △+ or ▽– and press OK.
The »PRESET« menu appears.
3 Select »Programme Sorting« with △+ or ▽– and press OK.
The »PROGRAMME SORTING« menu appears. (See Fig. 14.)
4 Using △+ or ▽–, select the programme position you want to move to another programme position and press OK.
The colour of the selected position changes. (See Fig. 15.)
5 Using the number buttons select the programme position (e.g. 05 for programme position 5) to which you want to move the selected programme and press OK. Now the two programme positions have been sorted. (See Fig. 16.)
6 Repeat steps 4 and 5 to exchange other programme positions.

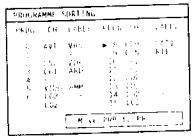

Fig. 14.

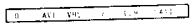

Fig. 15.

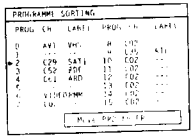

Fig. 16.

GB

Tuning in a Channel Temporarily

You can tune in a channel temporarily, even when it has not been preset. Use the buttons on the Full-Function side of the Remote Commander.

1 Press C on the Remote Commander. For cable channels, press C twice.
The indication "C" ("S" for cable channels) appears on the screen.
2 Enter the double-digit channel number using the number buttons (e.g. for channel 4, first press 0, then 4).
The channel appears.
However, the channel will not be stored.

MANUAL PROGRAMME PRESET

Skipping Programme Positions

You can skip unused programme positions when selecting programmes with the PROGR +/- buttons. However, the skipped programmes may still be called up when you use the number buttons.

PROGR

1 Press MENU to display the main menu.
2 Select »Preset« with △+ or ▽– and press OK.
The »PRESET« menu appears.
3 Select »Manual Programme Preset« with △+ or ▽– and press OK.
The »MANUAL PROGRAMME PRESET« menu appears. (See Fig.17.)
4 Using △+ or ▽–, select the programme position which you want to skip and press OK.
The "SYSTEM" position changes colour.
5 Press △+ or ▽–until – – – appears in the SYSTEM position. (See Fig. 18.)
6 Press OK. (See Fig. 19)
When you select programmes using the PROGR +/- buttons, the programme position will be skipped.
7 Repeat steps 4 to 6 to skip other programme positions.

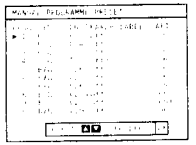

Fig. 17.

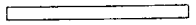

Fig. 18.

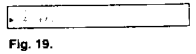

Fig. 19.

MANUAL PROGRAMME PRESET

Captioning a Station Name

Programme names are usually automatically taken from Teletext if available

You can also "name" a channel or an input video source using up to five characters (letters or numbers) to be displayed on the TV screen (e.g. ZDF). Using this function, you can easily identify which channel or video source you are watching.

1 Press MENU to display the main menu.
2 Select »Preset« with △+ or ▽– and press OK.
The »PRESET« menu appears.
3 Select »Manual Programme Preset« with △+ or ▽– and press OK.
The »MANUAL PROGRAMME PRESET« menu appears. (See Fig. 20.)
4 Using △+ or ▽–, select the programme position you want to caption and press OK repeatedly until the first element of the LABEL position is highlighted.
5 Select a letter or number with △+ or ▽– and press OK.The next element will be highlighted.
Select other characters in the same way. If you want to leave an element blank, select – and press OK. (See Fig. 21.)
6 After selecting all the characters, press OK repeatedly until the cursor appears by the next programme position (at the left margin). Now the caption you chose is stored. (See Fig. 22.)

If you have made a mistake:
Press ⬅ to go back to the previous position.
To go back to main menu:
Keep pressing ⬅.
To go back to the normal TV picture:
Press MENU.

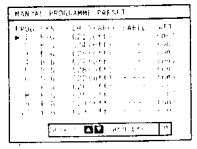

Fig. 20.

Fig. 21.

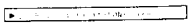

Fig. 22.

MANUAL PROGRAMME PRESET

Manual Fine-Tuning

Normally, the AFT(automatic fine-tuning) is already operating. However, if the picture is distorted, you can use the manual fine tuning function to obtain better picture reception.

1 Press MENU to display the main menu.

2 Select »Preset« with △+ or ▽– and press OK.
The »PRESET« menu appears.

3 Select »Manual Programme Preset« with △+ or ▽– and press OK.
The »MANUAL PROGRAMME PRESET« menu appears. (See Fig. 23.)

Manually fine tuned channels will be identified by ⬅ F ➡ on the on-screen indication (see page 43).

4 Using △+ or ▽–, select the programme position corresponding to the channel which you want to manually fine-tune, and press OK repeatedly until the AFT position changes colour.

To reactivate AFT (automatic fine tuning):
Repeat from the beginning and select "ON" in step 5.

5 Fine-tune the channel with △+ or ▽– so that you get the best TV reception. As you press the cursor buttons, the frequency changes from -15 to +15. (See Fig. 24.)

6 After fine tuning, press OK.
The cursor appears beside the next programme position (at the left margin). (See Fig. 25.) Now the fine-tuned level is stored.

7 Repeat steps 4 to 6 to fine-tune other channels.

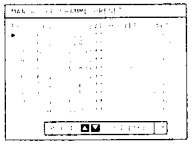

Fig. 23.

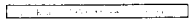

Fig. 24.

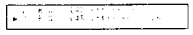

Fig. 25.

PARENTAL LOCK

Parental Lock

You can prevent undesirable broadcasts from appearing on the screen. We suggest you use this function to prevent children from watching programmes which you consider unsuitable.

1 Press MENU to display the main menu.

2 Select »Preset« with △+ or ▽– and press OK.
The »PRESET« menu appears.

3 Select »Parental Lock« with △+ or ▽– and press OK.
The »PARENTAL LOCK« menu appears. (See Fig. 26.)

4 Using △+ or ▽–, select the programme position you want to block and press OK.
The CH and LABEL, of the selected programme number change colour indicating that this programme is now blocked. (See Fig. 27.)

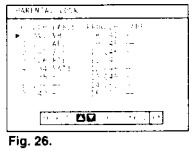

Fig. 26.

If you try to select a programme that has been blocked:
The message "Locked" appears on the blank TV screen.

5 Repeat step 4 to block other programme positions.

Fig. 27.

Cancelling blocking

1 On the »PARENTAL LOCK« menu, select the programme position you want to unblock with △+ or ▽–.

2 Press OK.
The CH and LABEL change to normal colour indicating that the blocking has been cancelled.

GB

Watching the TV

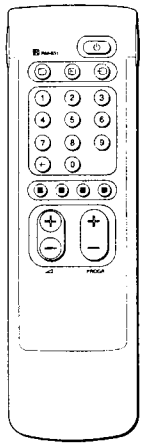

If no picture appears when you depress ⏻ on the TV:
And if the standby indicator on the TV is lit, the TV is in standby mode. Press ⏻ or one of the number buttons to switch it on.

This section explains the basic functions you use while watching TV. Most of the operations can be done using the simple side of the Remote Commander.

Switching the TV on and off

Switching on

Depress ⏻ on the TV.

Switching off temporarily

Press ⏻ on the Remote Commander.
The TV enters standby mode and the standby indicator on the front of the TV lights up.

To switch on again

Press ⏻, PROGR +/–, or one of the number buttons on the Remote Commander.

Switching off completely

Depress ⏻ on the TV.

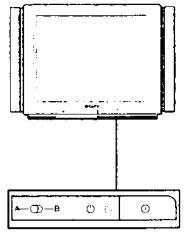

Selecting TV Programmes

Press PROGR +/– or press number buttons.

To select a double-digit number

Press –/– –, then the numbers.
For example, if you want to choose 23, press –/– –, 2, and 3.

Adjusting the Volume

Press ◿ +/–.

Operating the TV Using the Buttons on the TV

With the buttons on the TV, you can select programmes, adjust the volume, and select video input sources.

- Press P ◿ ⏻ button repeatedly until the programme number, ◿ (for volume), or ⏻ (for video input picture) appears. Then adjust with the –/+ buttons.
- Press –/+ buttons to switch on the TV from the standby mode.
- Press –/+ simultaneously to reset picture and sound controls to the factory preset level (RESET symbol ⁂ is displayed.)

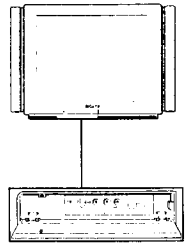

Watching Teletext or Video Input

For details of the teletext operation, refer to page 47.

Watching teletext

- Press ⓣ to view the teletext.
- Press three number buttons to select a page.
- Press one of the coloured buttons for fastext operation.
- Press ⓟ (PAGE +) or ⓟ (PAGE –) for the next or preceeding page.
- To go back to the normal TV picture, press ▢.

For details of the video input picture, refer to page 50.

Watching a video input picture

Press ⇥ repeatedly until the desired video input appears. To go back to the normal TV picture, press ▢.

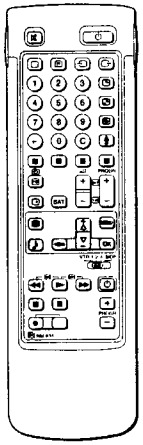

More Convenient Functions

Use the Full-Function side of the Remote Commander.

Displaying the on screen indications

- Press ⓘ once to display all the indications. They will disappear after some seconds.
- Press ⓘ twice to have the programme number and label stay on screen. Press twice again to make indications disappear.

Muting the sound.

Press 🔇.
To resume normal sound, press 🔇 again.

Displaying the time

Press ⓣ. This function is available only when teletext is broadcast.
To make the time display disappear, press ⓣ again.

Displaying of the Programme Table

Press OK. A Programme Table will be displayed on the right side of the TV screen (See Fig. 28)

Selecting of TV programmes
Press PROGR +/– or select the desired programme position using △+ or ▽– and press OK.

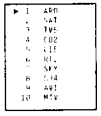

Fig. 28.

To make the Programme Table disappear
Press MENU.

GB

Adjusting and Setting the TV Using the Menu

PICTURE CONTROL
SOUND CONTROL

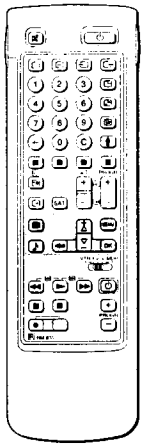

Adjusting the Picture and Sound

Although the picture and sound are adjusted at the factory, you can adjust them to suit your own taste. In addition, you can change the aspect ratio of the TV display for wide screen effect. You can also select dual sound (bilingual) programmes when available, adjust the sound for listening with the headphones ∩, or individually adjust and store the volume level of each channel (volume offset).

1 Press ● (for picture) or ♪ (for sound) on the Remote Commander.

or

Press MENU and select »Picture Control« or »Sound Control«, then press OK.
The »PICTURE CONTROL« or »SOUND CONTROL« menu appears. (See Fig. 29 or Fig. 30)

2 Using △+ or ▽–, select the item you want to adjust and press OK. The selected item changes colour. (See Fig. 31)

3 Adjust the setting with △+ or ▽ – and press OK.
The cursor appears beside the next item (at the left margin). (See Fig. 32)
For the effect of each control, see the table below.

4 Repeat steps 2 and 3 to adjust other items.

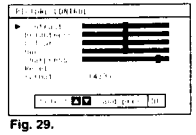

Fig. 29.

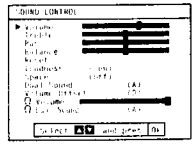

Fig. 30.

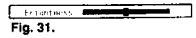

Fig. 31.

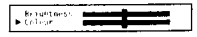

Fig. 32.

If you have made a mistake:
Press ⇤ to go back to the previous position.
To go back to the main menu:
Keep pressing ⇤.
To go back to the normal TV picture:
Press MENU.

Note:
HUE is only available for NTSC colour system.

Note on LINE OUT:
The audio level and the dual sound mode output from the ⊖ jack on the rear correspond to the HEADPHONES VOLUME and DUAL SOUND settings.

When watching a video input source with stereo sound:
You can select DUAL SOUND to change the sound.

Effect of each control

PICTURE CONTROL	Effect
Contrast	Less —I— More
Brightness	Darker —I— Brighter
Colour	Less —I— More
Hue	Greenish —I— Reddish
Sharpness	Softer —I— Sharper
Reset	Resets picture to the factory preset levels.
Format	4 : 3 : Normal 16 : 9 : Wide screen effect

SOUND CONTROL	Effect
Volume	Less —I— More
Treble	Less —I— More
Bass	Less —I— More
Balance	More left —I— More right
Reset	Resets sound to the factory preset levels.
Loudness	off : Normal on : When listening to low volume sound.
Space	off : Normal on : Obtain acoustic sound effect.
Dual Sound	A : left channel B : right channel stereo mono The selected mode of the A-CD-B indicator on the TV lights up.
Volume offset	– 7 Less O More + 7
Headphones:	
∩ Volume	Less —I— More
∩ Dual Sound	A : left channel B : right channel stereo mono

PROGRAMME TABLE

To go back to the normal TV picture:
Press MENU.

Using the Programme Table

On this table, you can see which channel is preset to which programme position. You can also select programmes using this table.

1 From the main menu, select »Programme Table« with △+ or ▽– and press OK.

The »PROGRAMME TABLE« menu appears. (See Fig. 33)

To scroll to higher programme numbers, press ▽–.

2 To select a programme using this menu, select the programme number with △+ or ▽– and press OK. The selected programme appears.

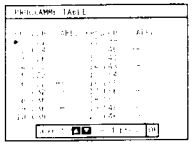

Fig. 33.

TIMER

To switch off the timer:
Select "OFF" in step 3.

To check the remaining time:
Press ⊙.

Using the Sleep Timer

You can select a time period after which the TV automatically switches into standby mode.

1 From the main menu, select »Timer« with △+ or ▽– and press OK.
The »Timer« menu appears. (See Fig. 34.)

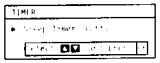

Fig. 34.

2 Press OK.
The time period option changes colour.

3 Select the time period with △+ or ▽–.
The time period (in minutes) changes as follows:
10→20→30→40→50→60→70→80→90
↑——— OFF ———┘

4 After selecting the time period, press OK.
The cursor moves back to the left margin and the timer starts counting.

GB

PIP (Picture In Picture)

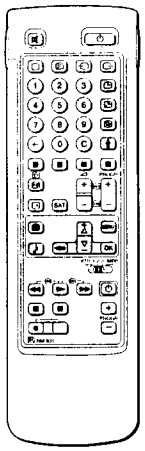

Note
RGB input source cannot be displayed in PIP.

With this function you can display a "PIP screen" (small picture) within the main TV picture. In this way you can watch or monitor the video output from any connected equipment (for example from a VTR) while watching TV or vice versa. For information about connection of other equipment, refer to page 50.

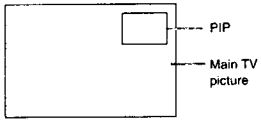

Switching PIP on and off

Press ◔.
The PIP screen will be displayed. The PIP picture will come from the source chosen when the TV was last used.

To switch PIP off
Press ◔ again.

Selecting a PIP source

Press ⬆.
The symbol ⬆ will be displayed at the bottom, left-hand corner of the screen.
Press ⊖ repeatedly until the desired PIP source is indicated (e.g. TV, AV1, AV2, YC2, AV3, YC3, AV4, YC4).

Note
If no video source has been connected, the PIP picture will be noisy or dark.

Swapping screens

Press ◔.
The main screen will switch the picture with the PIP screen.

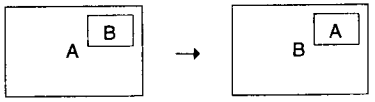

Note
If a TV programme is on the PIP screen and a video source on the main picture, and you want to change channels, first press ⬆ and then the programme buttons or PROGR +/–.

Changing the position of the PIP

Press ⊕ repeatedly to change the position of the PIP screen within the main screen. There are four different positions available.

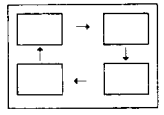

Teletext

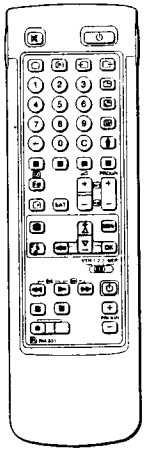

Note:
Teletext errors may occur if the broadcasting signals are weak.

With the simple side of the Remote Commander:
You can switch teletext on and off, operate Fastext, and directly select page numbers.

TV stations broadcast an information service called Teletext via the TV channels. Teletext service allows you to receive various information pages such as weather reports or news at any time you want. For advanced teletext operation, use the buttons on the Full-Function side of the Remote Commander.

Direct Access Functions

Switching Teletext on and off

1 Select the TV channel which carries the teletext broadcast you want to watch.

2 Press ▤ to switch on teletext.
A teletext page will be displayed (usually the index page).If there is no teletext broadcast, "No text available" is displayed on the information line at the top of the screen.

To switch teletext off
Press ○.

Selecting a teletext page

With direct page selection

Use the number buttons to input the three digits of the chosen page number.
If you have made a mistake, type in any three digits. Then re-enter the correct page number.

With page-catching

1 Select a teletext page with a page overview (e.g. index page).

2 Press OK. Using △+ or ▽–, select the desired page. "Page-Catching" will be displayed on the information line. Press OK. The requested page will appear in a few seconds.
Press ▤ to resume normal teletext reception.

Accessing next or preceding page

Press ▸▸ (PAGE +) or ◂◂ (PAGE –).
The next or preceding page appears.

Superimposing the teletext display on the TV programme

- Press ▤ once in teletext mode or twice in TV mode.
- Press ▤ again to resume normal teletext reception.

Preventing a teletext page from being updated

- Press ⊕ (HOLD). The HOLD symbol "⊕" is displayed on the information line.
- Press ▤ to resume normal teletext reception.

Using Fastext

Note:
Fastext operation is only possible, if the TV station broadcasts Fastext signals.

With Fastext you can access pages with one key stroke.When a Fastext page is broadcast, a colour-coded menu will appear at the bottom of the screen. The colours of this menu correspond to the red, green, yellow and blue buttons on the Remote Commander.
Press the corresponding coloured button on the Remote Commander which corresponds to the colour-coded menu. The page will be displayed after some seconds.

GB

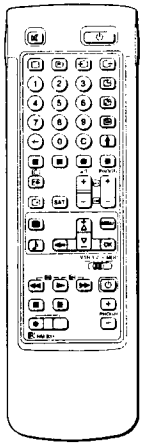

Note:
Some of the features may not be available depending on the Teletext service.

Note on Subtitles:
If the subtitles are not broadcast on page 888, please select the subtitle page using the number buttons.

Using the Teletext Menu

This TV is provided with a menu-guided teletext system. When teletext is switched on, you can use the menu buttons to operate the teletext menu. Select the teletext menu functions in the following way:

1 Press MENU. The menu will be superimposed on the teletext display. (See Fig. 35)

2 Using △+ or ▽–, select the teletext function you want and press OK. (See Fig. 36)

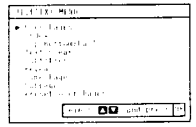

Fig. 35.

Fig. 36.

USER PAGES/PRESET USER PAGES

See page 49 for information about presetting and operating the user pages.

INDEX

The index will give you an overview of the contents of the teletext and the page numbers.

TOP/BOTTOM/FULL

For convenient reading of a teletext page, you can enlarge the teletext display with the ability to scroll up and down the screen. After having selected the function, an information line »Top/Bottom/Full« will be displayed. (See Fig. 37)

Press △+ for Top to enlarge the upper half. For Bottom, keep pressing ▽– to enlarge the lower half. Press OK for Full to resume the normal size.

Press ▤ to resume normal teletext reception.

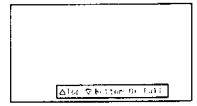

Fig. 37.

TEXT CLEAR

After having selected the function, you can watch a TV programme while waiting for a requested teletext page to be displayed. (The symbol changes colour) (See Fig. 38)

Press ▤ to view the requested page.

Fig. 38.

SUBTITLES

Your teletext service will inform you if a TV programme is subtitled. After having selected the function the subtitles will be displayed.

REVEAL

Sometimes pages contain concealed information, such as answers to a quiz. The reveal option lets you disclose the information. After having selected the function, an information line "REVEAL ON/OFF" will be displayed. (See Fig. 39)

Using △+ or ▽–, select ON to reveal the information or OFF to conceal it again.

Press ▤ to resume normal teletext reception.

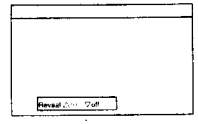

Fig. 39.

TIME PAGE

Your teletext service will inform you, if a time coded page is available. You may have a page (e.g. an alarm page) displayed at a certain time.

1 Press OK, using △+ or ▽–, select ON and press OK.

2 To select the desired page, enter the three digits of the page number using the number buttons.

To cancel the request:
Select "OFF" for the TIME PAGE setting.

To cancel the request:
Select the SUBPAGE setting and press OK.

If two broadcasting stations use the same Teletext:
You can preset one bank to 2 different programme positions.

3 To select the desired time, enter four digits for the desired time (e.g. 1800) using the number buttons. Press MENU. The selected time is displayed at the top in the left-handed corner. At the requested time, the page will be displayed.

SUBPAGE

You may want to select a particular teletext page from several subpages which are rotated automatically. After having selected the function, an information line will be displayed at the bottom of the screen.

To select the desired subpage, enter four digits using PROGR +/– or the number buttons. (e.g. enter 0002 for the second page of a sequence).

User Page Bank System

You can store up to 30 pages in the "Teletext page bank system". In this way you have quick access to the pages you watch frequently.

Storing pages

There are 5 "banks" (A to E) for 5 teletext stations. In each bank you can store 6 preferred pages (P1 to P6).

1 Press ⓔ (if Teletext is not on already) and MENU to show the TELETEXT MENU display.

2 Select »Preset User« Pages with △+ or ▽– and press OK.

3 Select the desired bank with △+ or ▽– and press OK. The cursor will go to the first position (P1) of the preferred pages.

4 Input the three digits of your first preferred page with the number buttons.
The cursor will go to the second position.

5 Repeat step 4 for the other 5 page numbers you want to preset. If you do not want to preset all 6 page numbers available, press OK repeatedly until the cursor appears besides the next bank at the left margin.

6 Select »Allocate Bank« with △+ or ▽– and press OK.

7 Select the programme position for which you have to preset pages with △+ or ▽– and press OK. (See Fig. 40)

8 Select the desired bank with △+ or ▽– (Banks A to E are available) and press OK.

9 Repeat steps 3 to 8 for the other 4 banks available.

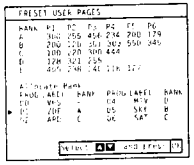

Fig. 40.

Displaying User Pages

1 Select MENU.

2 Select »User Pages« with △+ or ▽– and press OK.
A table of the stored preferred pages will be displayed. (See Fig. 41)

3 Select the desired page with △+ or ▽– and press OK. The page will be displayed after some seconds.

or

You can use the coloured buttons on the Remote Commander to have quick access to the first four User Pages. Page 1 corresponds to the red button, P 2 to the green one, P 3 to the yellow one and P 4 to the blue button.

To select the desired page press the respective coloured button while you are in TV mode. Now the Page number of this teletext page will appear in white at the top in the left-handed corner of the TV screen. When the page number changes colour the page is available. Press the coloured button again to display the page.

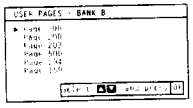

Fig. 41.

GB

Connecting and Operating Optional Equipment

Connecting Optional Equipment

You can connect optional audio-video equipment to this TV such as VTRs, video disc players, and stereo systems.

To connect a VTR using the 𝍐 terminal:
Connect the aerial output of the VTR to the aerial terminal 𝍐 of the TV.
We recommend that you tune in the video signal to programme number "0". For details see "Preset channels manually" on page 36.

If the picture or the sound is distorted:
Move the VTR away from the TV.

Note:
After having connected all optional equipment to the TV, attach the supplied cover onto the rear panel (see illustration at the right).

S-video input (Y/C input):
Video signals may be separated into Y (luminance or brightness) and C (chrominance) signals. Separating the Y and C signals prevents them from interfering with one another, and therefore improves picture quality (especially luminance). This TV is equipped with 2 S-Video input jacks through which these separated signals can be input directly.

When connecting a monaural VTR:
Connect only the white ⊖ jack to both the TV and VTR.

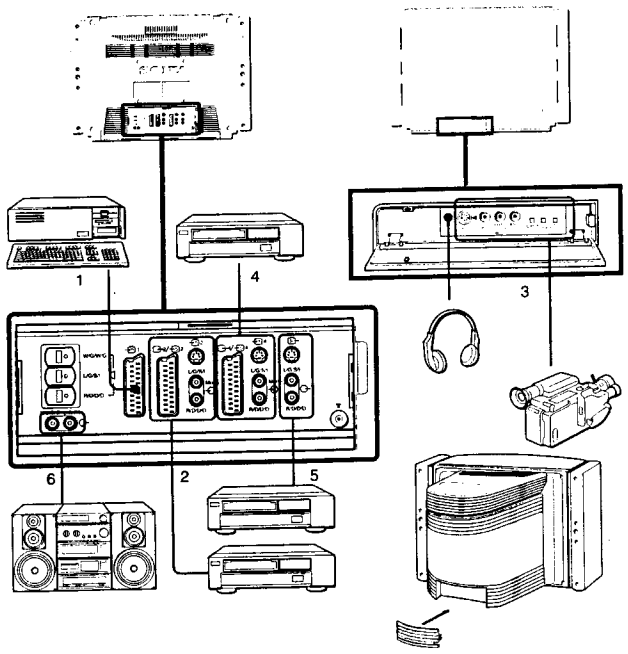

Acceptable input signal	Available output signal
1 Normal audio/video and RGB signal	Video/audio from TV tuner
2 Normal audio/video and S video signal	Video/audio from selected source
3 Normal audio/video and S video signal	No outputs
4 Normal audio/video and S video signal	Video/audio displayed on TV screen (monitor out)
5 No inputs	S video/audio signal displayed on TV screen (monitor out)
6 No inputs	Audio signal (variable)

Selecting input with PROGR +/– or number buttons:
You can preset video input sources to the programme positions so that you can select them with PROGR +/– or number buttons.
For details, see "Preset channels manually" on page 36.

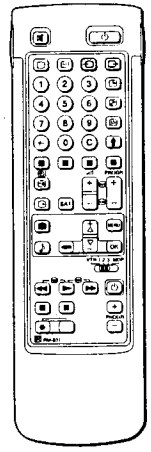

Selecting input and output

This section explains how to view the video input picture (of a video source connected to your TV), and how to select the output signal using direct access buttons or the menu system.

Selecting input

Press ⊣○ repeatedly to select the input source.

The symbol of the selected input source will appear.

To go back to the normal TV picture

Press ○.

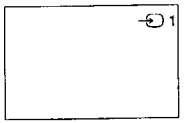

Input modes

Symbol	Input signal
⊣○ 1	Audio/video input through the ⊣○ 1 connector
⊣○	RGB input through the ⊣○ 1 connector
⊣○ 2	Audio/video input through the ○→2/⊣Ⓢ 2 connector
⊣Ⓢ 2	S video input through the ○→2/⊣Ⓢ 2 or ⊣Ⓢ 2 connector
⊣○ 3	Audio/video input through ⊣○ 3 and ⊣○ 3 on the front
⊣Ⓢ 3	S video input through the ⊣Ⓢ 3 connectors on the front (4-pin connector)
⊣○ 4	Audio/video input through the ○→4/⊣Ⓢ 4 connector
⊣Ⓢ 4	S video input through the ○→4/⊣Ⓢ 4 or ⊣Ⓢ 4 connector (4-pin connector)

GB

You can also select the input mode using the P and –/+ buttons on the TV. In this case, first select ⊣○, and then press –/+ buttons to select the input.

Selecting the output

The ○→2/⊣Ⓢ 2 connector outputs the source input from the other connectors.

Press ○→ repeatedly to select the output.
The symbol of the selected output source appears.

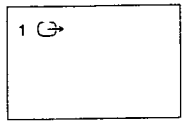

Output modes

Symbol ○→2/⊣Ⓢ 2 connector outputs	
1 ○→	The audio/video signal from the ⊣○ 1 connector
2 ○→	The audio/video signal from the ○→2/⊣Ⓢ 2 connector
2 Ⓢ→	The audio/S video signal from the ○→2/⊣Ⓢ connector
3 ○→	The audio/video signal from the ⊣○ 3, ⊣○ 3 connectors
3 Ⓢ→	The audio/S video signal from the ⊣Ⓢ 3, ⊣○ 3 connectors
4 ○→	The audio/video signal from the ○→4/⊣Ⓢ 4 connector
4 Ⓢ→	The audio/S video signal from the ○→4/⊣Ⓢ 4 connector
TV○→	The audio/video signal from the ⊓ aerial terminal

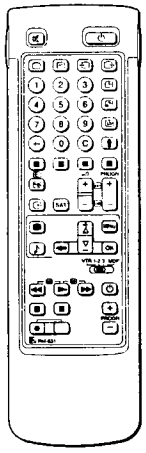

When recording:
When you use the ● (record) button, make sure to press this button and the one to the right of it simultaneously.

Checking and selecting the input and output sources using the menu

You can display the menu to see which input sources are selected for the TV screen and PIP screen, and which output source is selected. You can also select them on the menu display.

1 Select Video Connection with △+ or ▽– and press OK. The VIDEO CONNECTION menu appears. (See Fig. 42)

You can see which source is selected for the TV and PIP input, and for the output. If you want to select the input and output on this menu, go on to the next step.

2 Select TV Screen (input source for the TV screen), PIP(input source for the PIP screen), or output (output source) with △+ or ▽– and press OK. One of the source items changes colour. (See Fig. 43)

3 Select the desired source with △+ or ▽–. (See Fig. 44)
For details about each source, see the table on page 51.

4 Press OK.

The selected source is confirmed, and the cursor appears. (See Fig. 45)

5 Repeat steps 2 to 4 to select the source for other inputs or outputs.

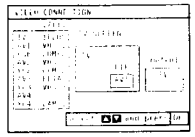

Fig. 42.

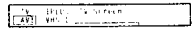

Fig. 43.

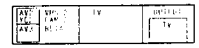

Fig. 44.

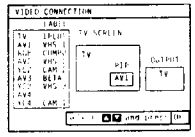

Fig. 45.

Remote Control of Other Sony Equipment

You can use the TV Remote Commander to control most Sony remote-controlled video equipment such as: Beta, 8mm or VHS VTRs or video disc players.

Tuning the Remote Commander to the equipment

1 Set the VTR 1/2/3 MDP selector according to the equipment you want to control:

VTR 1: Beta or ED Beta VTR

VTR 2: 8mm VTR

VTR 3: VHS VTR

MDP: Video disc player

2 Use the buttons indicated in the illustration to operate the additional equipment.

If your video equipment is furnished with a COMMAND MODE selector: set this selector to the same position as the VTR 1/2/3 MDP selector on the TV Remote Commander.

If the equipment does not have a certain function, the corresponding button on the Remote Commander will not operate.

SECTION 2
DISASSEMBLY

2-1. REAR COVER REMOVAL

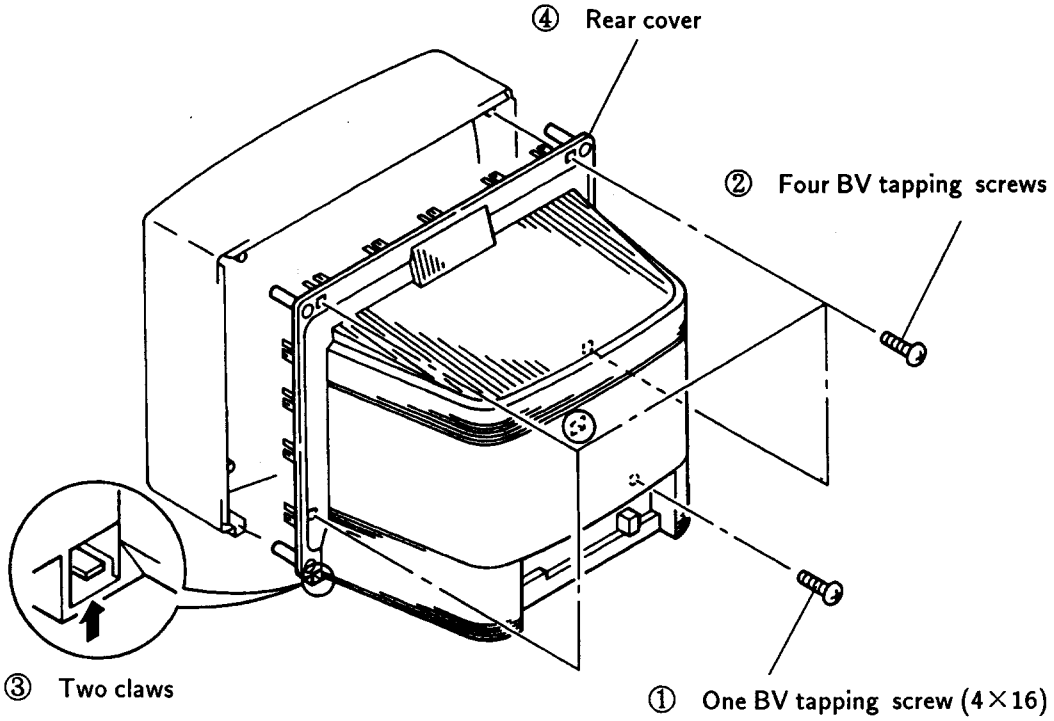

2-2. CHASSIS ASSY REMOVAL

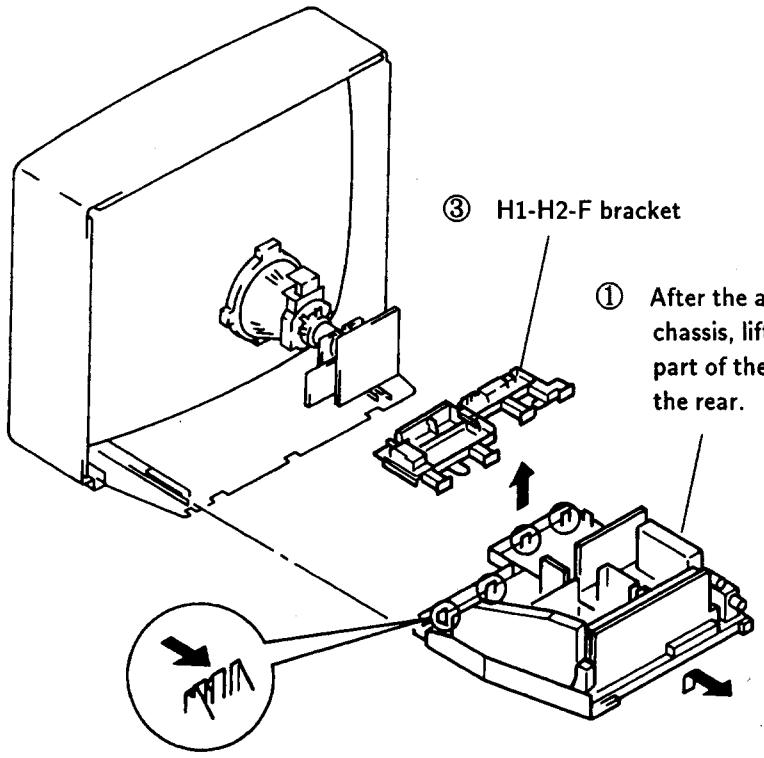

② Push the three claws of the main chassis in the direction of the arrow and remove the H1-H2-F bracket upwards.

2-3. SERVICE POSITION

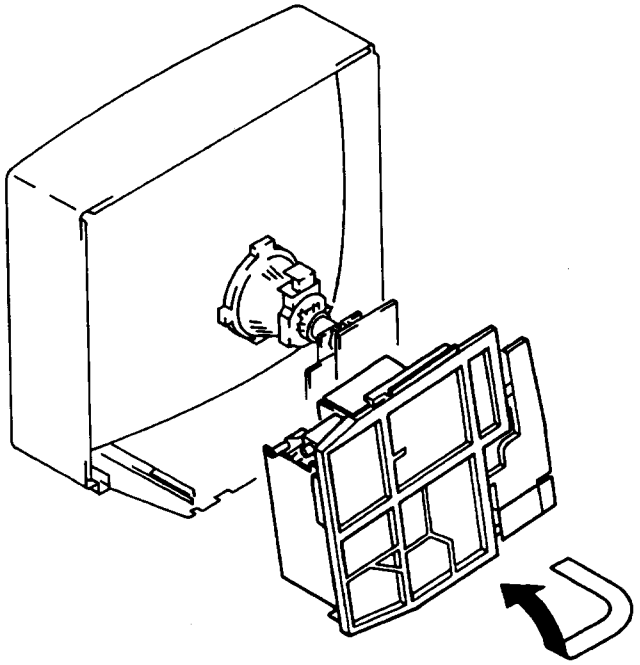

2-4. EXTENSION BOARD

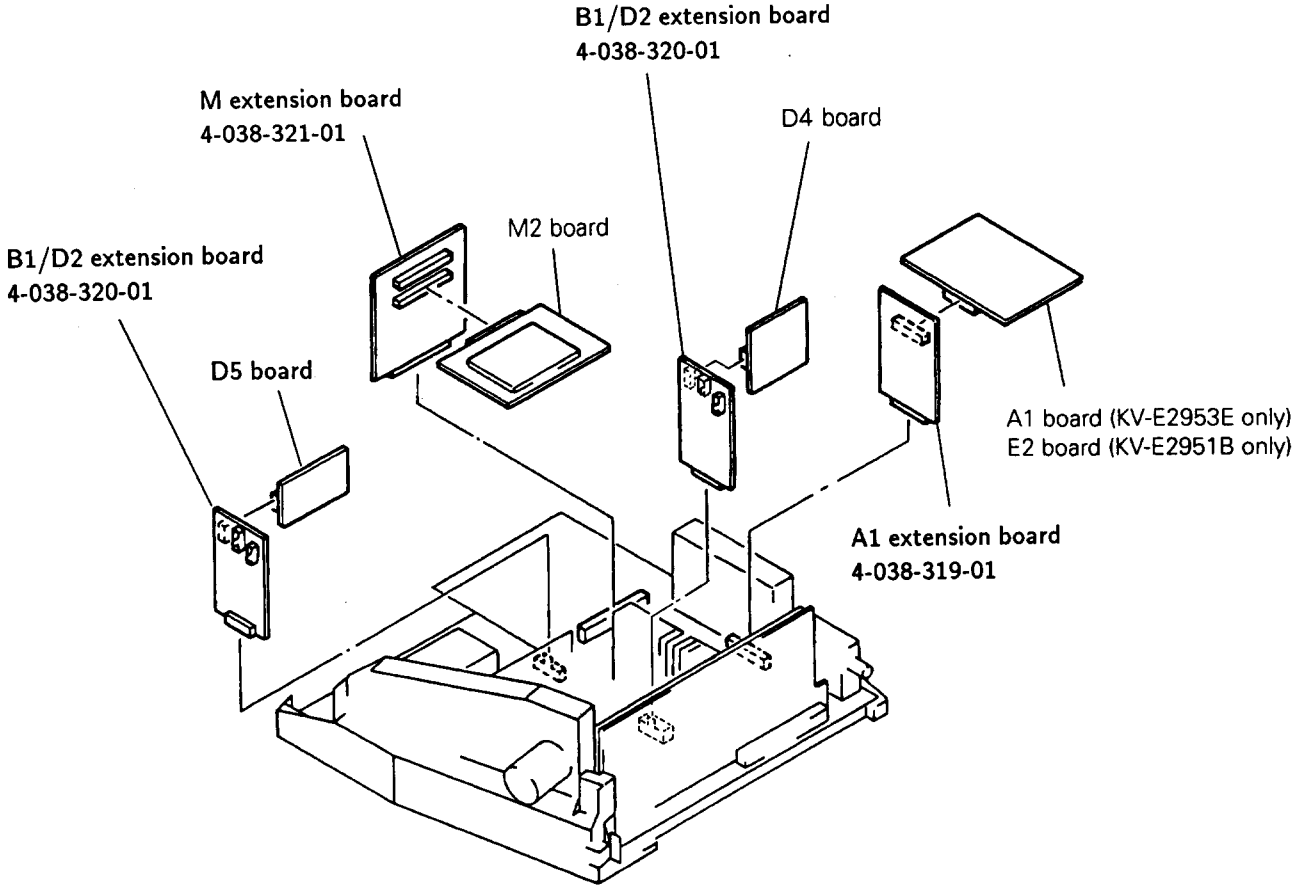

2-5. F BRACKET REMOVAL

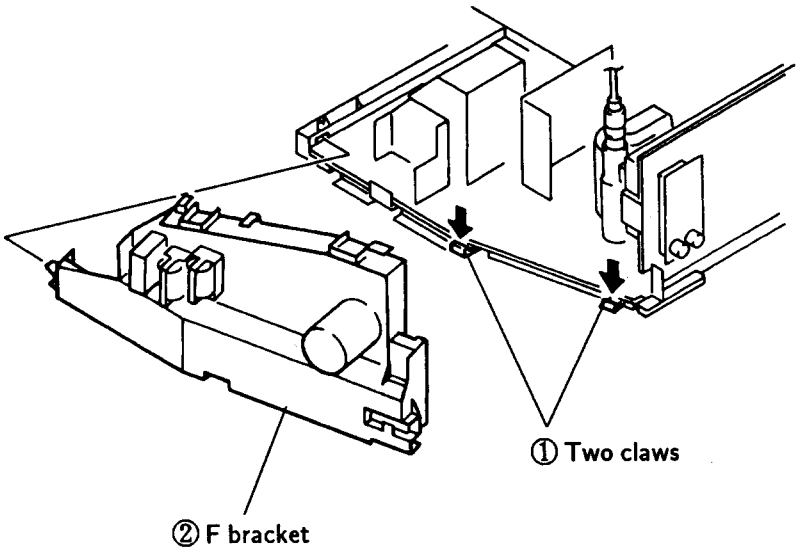

2-6. J AND K BOARDS REMOVAL

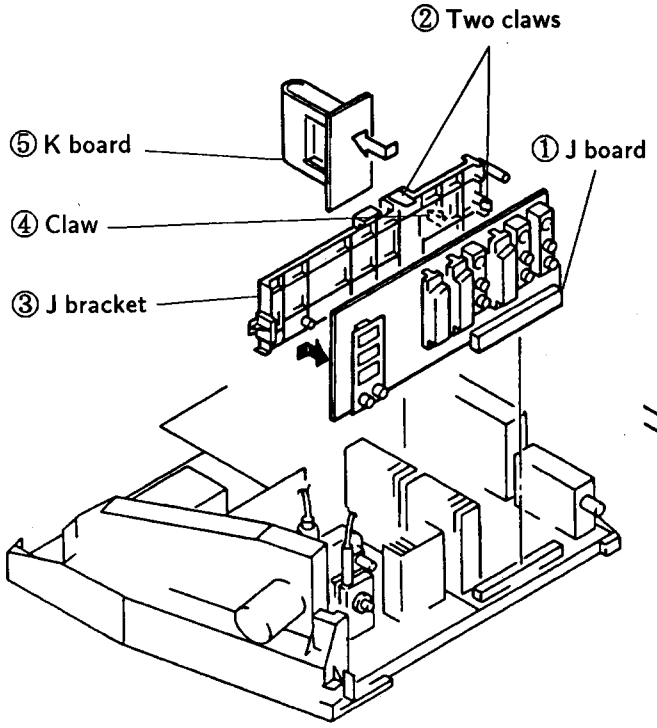

2-7. P 1 BOARD REMOVAL

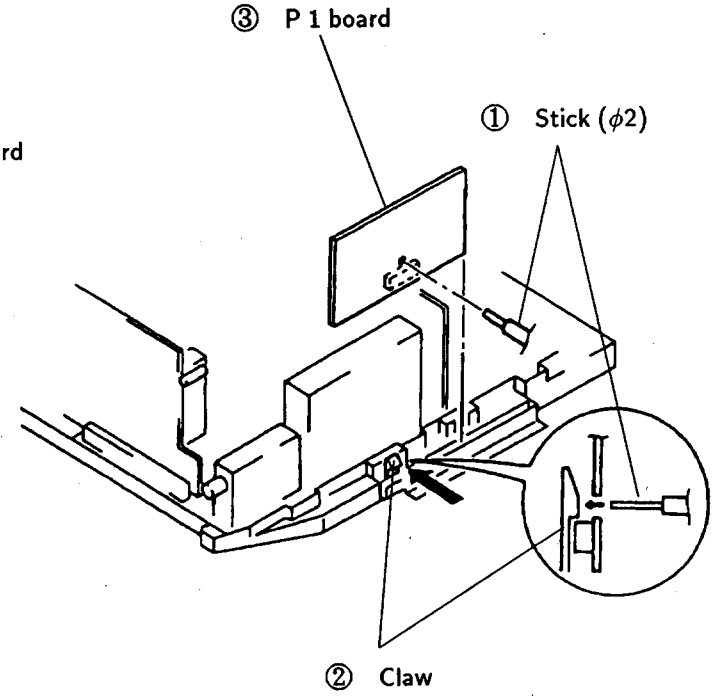

2-8-1. WIRE DRESSING

※ Keep distance between ① and ②

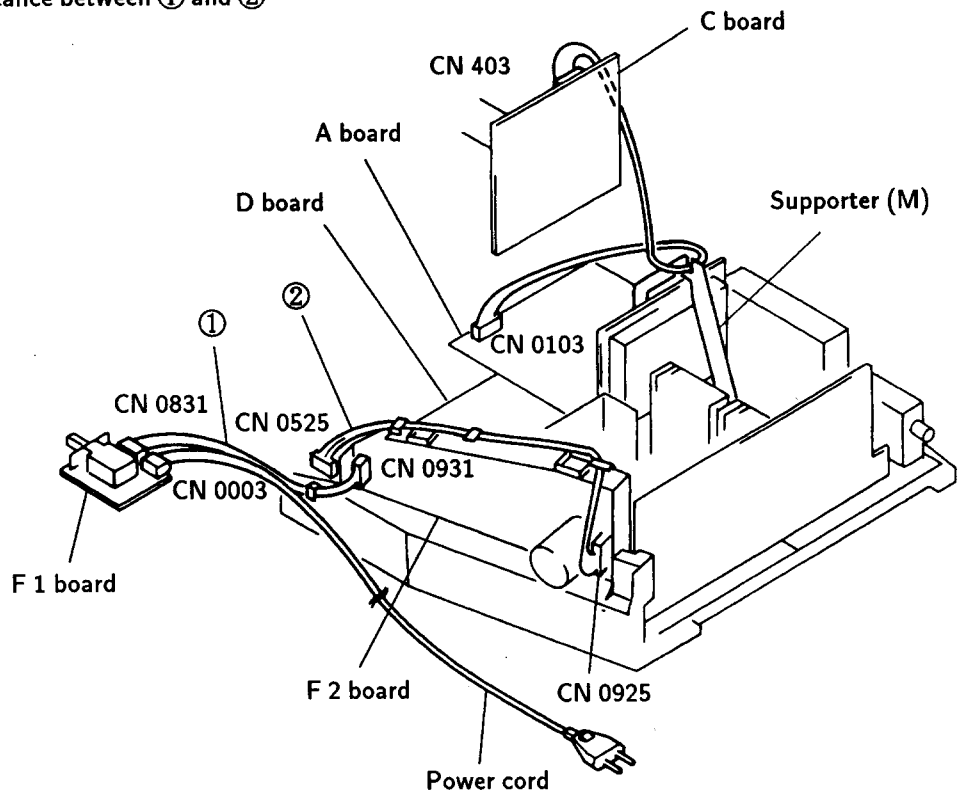

2-8-2. WIRE DRESSING

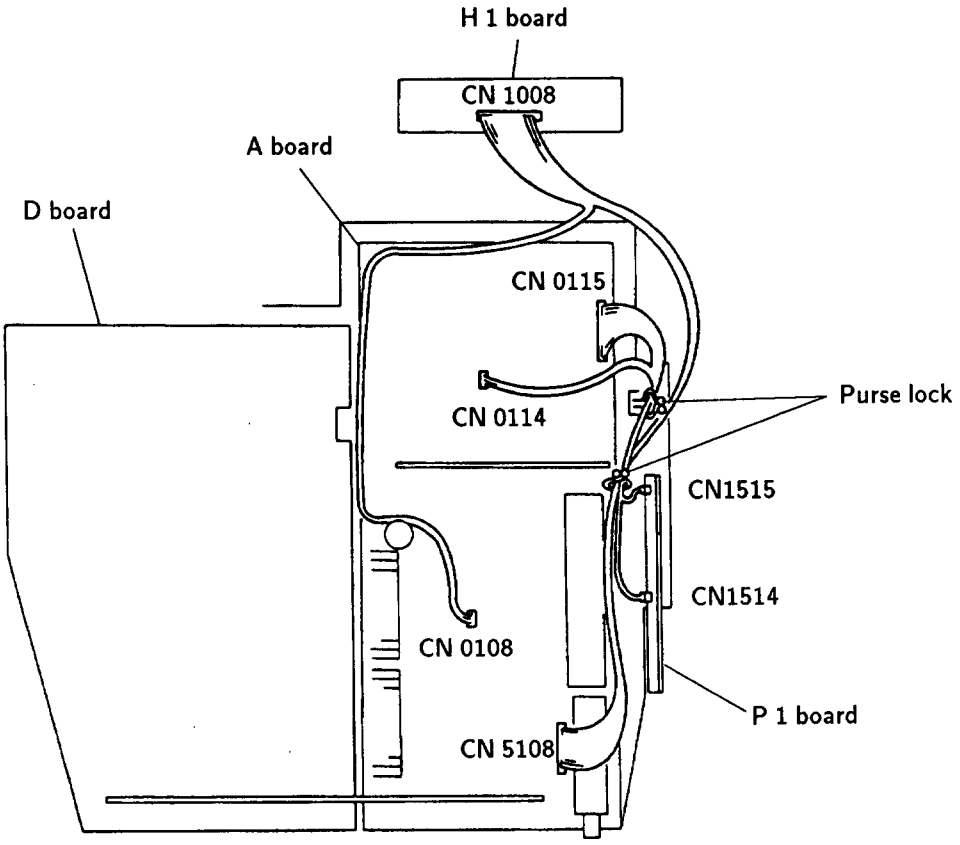

2-9. PICTURE TUBE REMOVAL

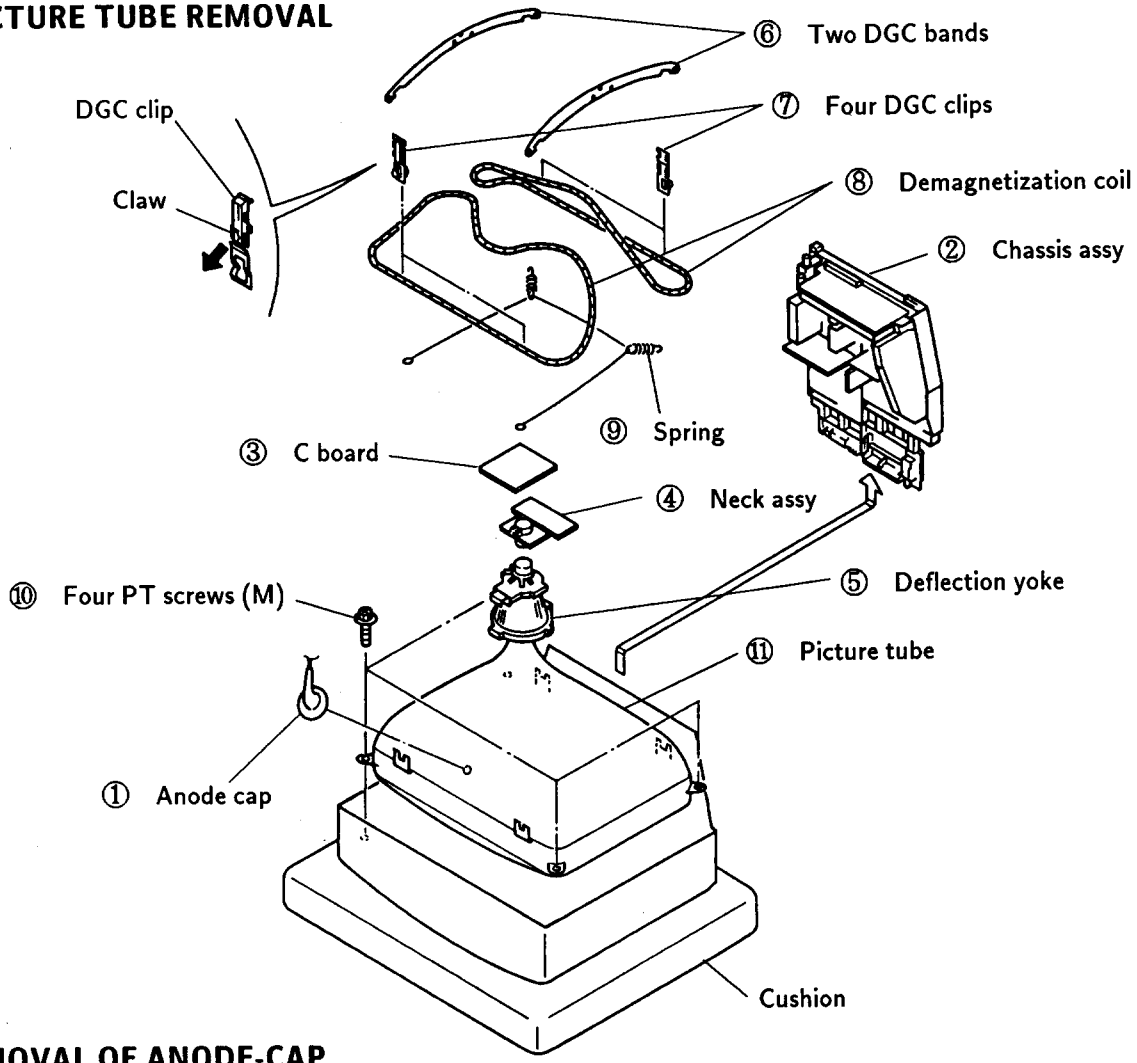

• REMOVAL OF ANODE-CAP

NOTE : Short circuit the anode of the picture tube and the anode cap to the metal chassis, CRT shield or carbon paint on the CRT, after removing the anode.

• REMOVING PROCEDURES

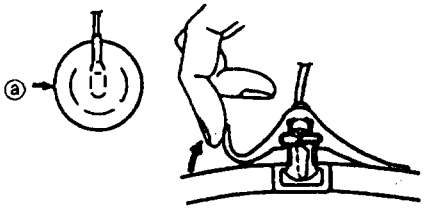

① Turn up one side of the rubber cap in the direction indicated by the arrow ⓐ.

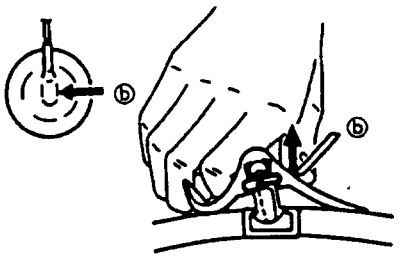

② Using a thumb pull up the rubber cap firmly in the direction indicated by the arrow ⓑ.

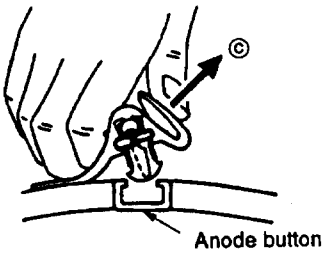

③ When one side of the rubber cap is separated from the anode button, the anode-cap can be removed by turning up the rubber cap and pulling up it in the direction of the arrow ⓒ.

• HOW TO HANDLE AN ANODE-CAP

① Don't hurt the surface of anode-caps with sharp shaped material!

② Don't press the rubber hardly not to hurt inside of anode-caps!
A material fitting called as shatter-hook terminal is built in the rubber.

③ Don't turn the foot of rubber over hardly!
The shatter-hook terminal will stick out or hurt the rubber.

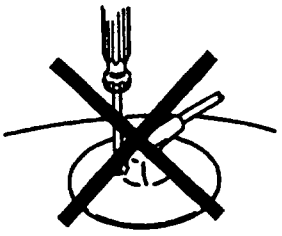

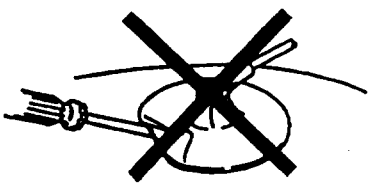

SECTION 3
SET-UP ADJUSTMENTS

- When complete readjustment is necessary or a new picture tube is installed, carry out the following adjustments.
- Unless there is specific instruction to the contrary, carry out these adjustments with the rated power supply.
- Unless there is specific instruction to the contrary, set the controls and switches as this way:

◑ Contrast 80%
(or remote control normal)
☼ Brightness 50%

- Carry out the following adjustments in this order:

1. Beam landing
2. Convergence
3. Focus
4. White balance

Note: Testing equipment required.

1. Colour bar/pattern generator
2. Degausser
3. DC power supply
4. Digital multimeter
5. Oscilloscope

Preparation:

- In order to reduce the influence of geomagnetism on the set's picture tube face it east or west.
- Switch on the set's power and degauss with the degausser.

3-1. BEAM LANDING

1. Input a white signal with the pattern generator.
   Contrast, Brightness } normal
2. Position neck assy as shown in Fig. 3-2.
3. Set the pattern generator raster signal to red.
4. Move the deflection yoke to the rear and adjust with the purity control so that the red is at the center and the blue and the green take up equally sized areas on each size. (see Fig. 3-1 - 3-3.)
5. Move the deflection yoke forward and adjust so that entire screen is red. (See Fig. 3-1.)
6. Switch the raster signal to blue, then to green and verify the condition.
7. When the position of the deflection yoke has been decided, fasten the deflection yoke with the screws.
8. If the beam does not land correctly in all the corners, use a magnet to adjust it. (See Fig. 3-4.)

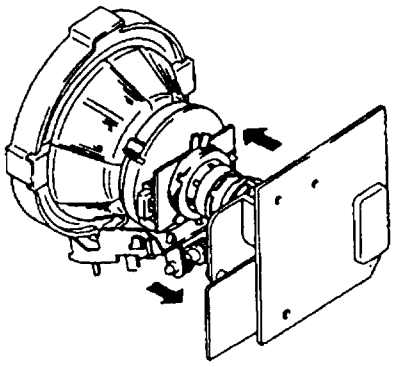

Fig. 3-1

Fig. 3-2

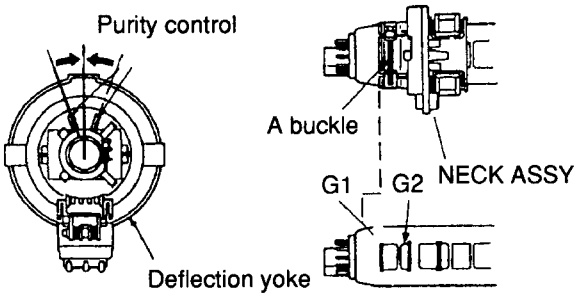

Fig. 3-3

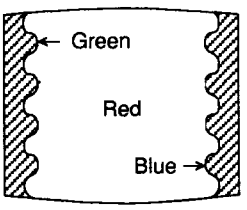

Fig. 3-4

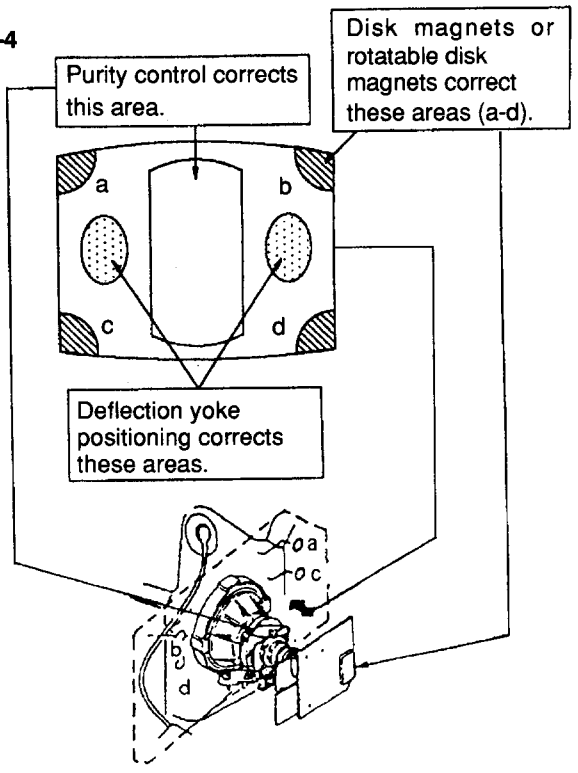

3-2. CONVERGENCE

Preparations:

- Before starting this adjustment, adjust the focus, horizontal size and vertical size.
- Minimize the brightness setting.
- Provide dot pattern.

(1) Horizontal and vertical static convergence

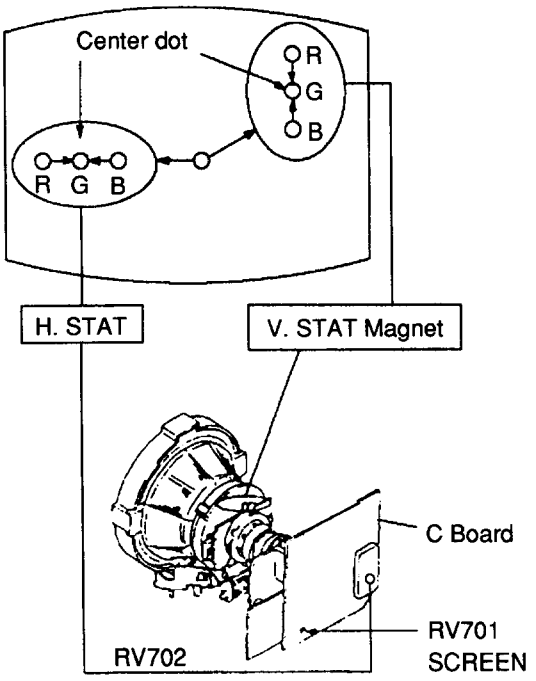

1. (Moving horizontally), adjust the H.STAT control so that the red, green, and blue points are on top of each other at the center of the screen.
2. (Moving vertically), adjust the V.STAT magnet so that the red, green, and blue points are on top of each other at the center of the screen.
3. If the H.STAT variable resistor cannot bring the red, green, and blue points together at the center of the screen, adjust the horizontal convergence with the H.STAT variable resistor and the V.STAT magnet in the manner given below.
   (In this case, the H.STAT variable resistor and the V.STAT magnet influence each other)

- Tilt the V.STAT magnet and adjust the static convergence by opening or closing the V.STAT magnet.

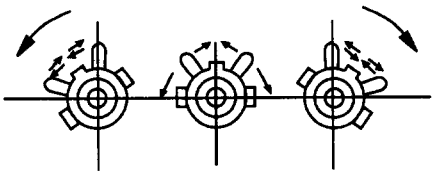

4. If the V.STAT magnet is moved in the direction of the ⓐ and ⓑ arrows, the red, green, and blue points move as shown below.

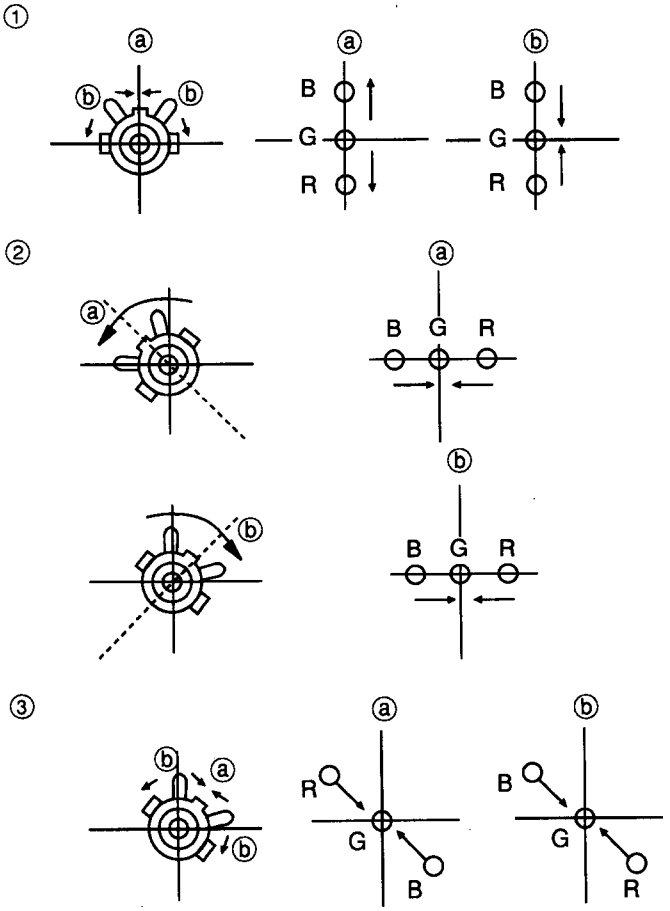

- Operation of BMC (Hexapole) Magnet

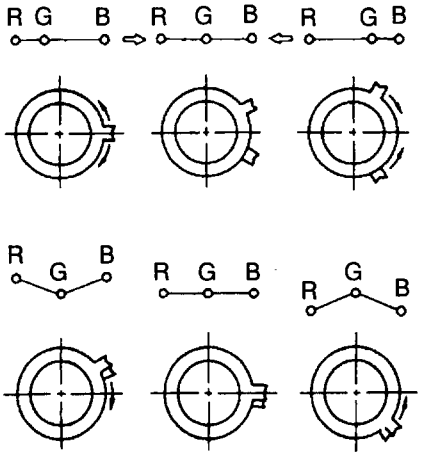

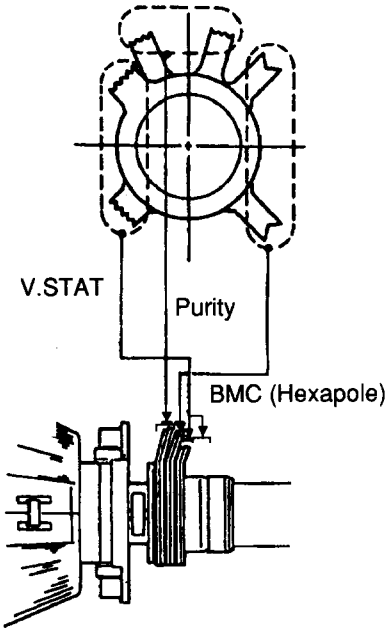

- The respective dot positions resulting from moving each magnet interact, so be sure to perform adjustment while tracking.
  Use the H.STAT VR to adjust the red, green, and blue dots so they coincide at the center of screen (by moving the dots in the horizontal direction).

(2) Dynamic Convergence Adjustment

Preparations:

- Before starting this adjustment, adjust the horizontal static convergence and the vertical static convergence.

1. Slightly loosen the deflection yoke screws.
2. Remove the deflection yoke spacer.
3. Move the deflection yoke as shown in the figure below and optimize the convergence.
4. Tighten the deflection yoke screws.
5. Install the deflection yoke spacer.

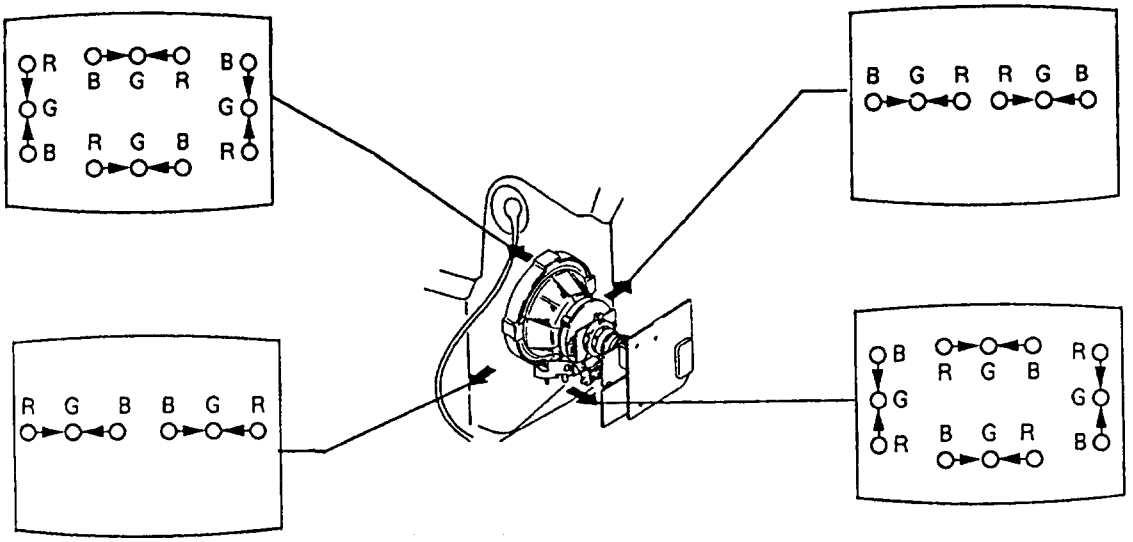

(3) Screen corner convergence

If you cannot adjust corner convergence properly, correct them with permalloy.

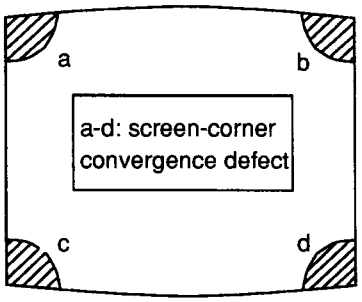

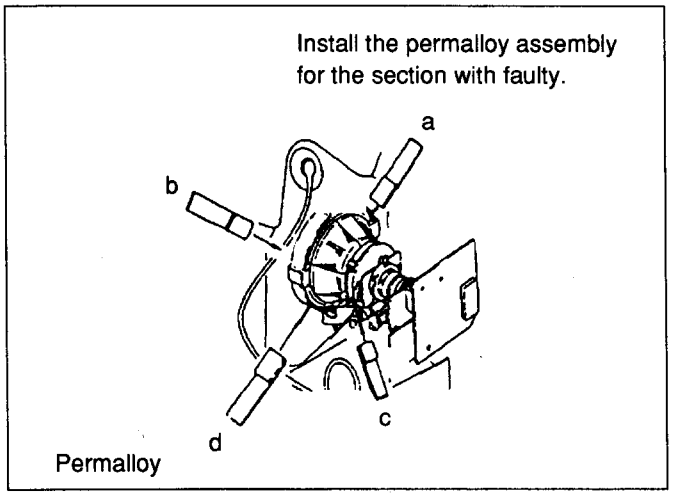

3-3. FOCUS

Adjust the focus to optimize the screen.

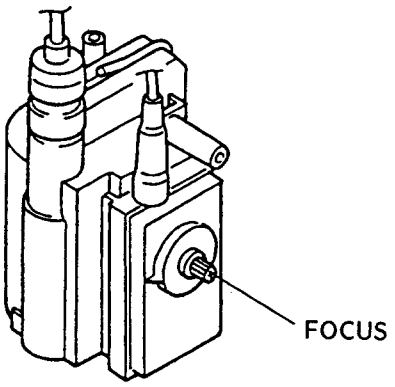

3-4. WHITE BALANCE

Screen G2 Setting

1. Input the dot signal from the pattern generator.
2. Set the picture brightness control to its lowest level.
3. Apply 180V DC to the R, G, and B cathodes with an external power supply.
4. While watching the picture, adjust G2 control RV701 (Screen) to the point just before the return lines disappear.

White balance adjustment

1. Receive all-white signal.
2. Enter into service mode. (Refer to the section 4 "Electrical Adjustment" to how to enter service mode.)
3. Select CXA1587 on menu.

Item No.	Adjustment item	Data amount
09	SUB BRIGHT	ADJ.
10	SUB HUE	7
11	VM LEVEL	2
12	NR LEVEL	0
13	ABL MODE	0
14	G-DRIVE	ADJ.
15	B-DRIVE	ADJ.
16	G-AUTO CUT OFF	ADJ.
17	B-AUTO CUT OFF	ADJ.
18	R-MANUAL CUT OFF	ADJ.
19	G-MANUAL CUT OFF	ADJ.
20	B-MANUAL CUT OFF	ADJ.

4. Set picture to MAX.
5. Adjust G-DRIVE B-DRIVE with ▲, ▼ buttons so that the white balance becomes optimum.
6. Press [OK] button to write the data for each item.
7. Set picture to MIN.
8. Adjust G-AUTO CUT OFF, B-AUTO CUT OFF, R-MANUAL CUT OFF, G-MANUAL CUT OFF and B-MANUAL CUT OFF with ▲, ▼ buttons so that the white balance becomes optimum.
9. Press [OK] button to write the data for each item.

SECTION 4
CIRCUIT ADJUSTMENTS

4-1. ELECTRICAL ADJUSTMENTS

Service adjustment to this model can be performed with the supplied remote commander, RM-831.

HOW TO ENTER INTO SERVICE MODE

1. Turn on the main power switch of the set while pressing any two buttons on the front panel.

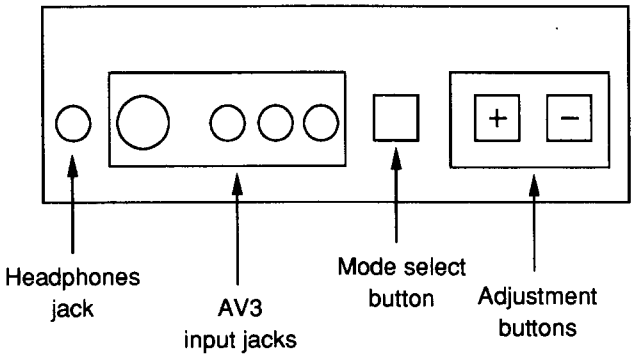

Fig. 4-1

2. "TT" will appear on the upper right corner of the screen.

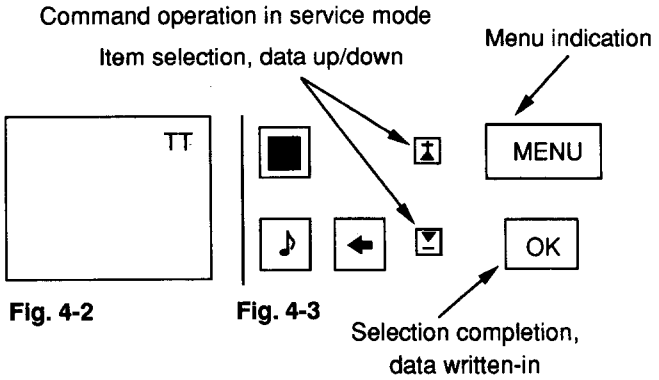

Fig. 4-2 **Fig. 4-3**

3. Press the MENU button of the commander to get the menu on screen.

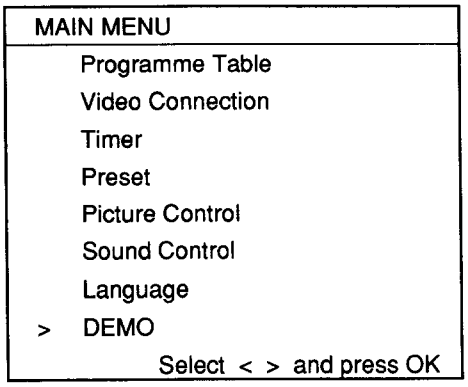

Fig. 4-4

4. Press the ⊼ and ⊻ buttons of the commander and move > to DEMO.
5. Press OK button to proceed to the next menu.
6. The menu of fig. 4-5 will appear on screen. Select DEVICE corresponding to the adjustment item from the table on next page.

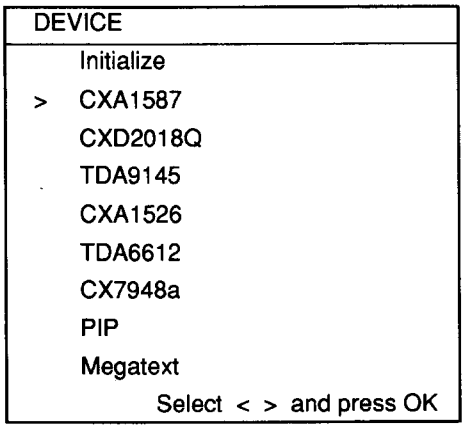

Fig. 4-5

7. If adjustment item is CXA1587, press the ⊻ button and move > to CXA1587.

CXA1587

Item No.	Adjustment item	Data amount
01	PICTURE	53
02	COLOUR	31
03	BRIGHT	31
04	HUE	31
05	SHARPNESS	7
06	RGB PICTURE	11
07	SUB CONTRAST	ADJ.
08	SUB COLOUR	ADJ.
> 09	SUB BRIGHT	ADJ.
10	SUB HUE	8
11	VM LEVEL	2
12	NR LEVEL	0
13	ABL MODE	0
14	G-DRIVE	ADJ.
15	B-DRIVE	ADJ.

8. Press OK button to get the next selection menu.
9. Press ⊻ button and move > to the adjustment item and press OK button.
10. Press the ⊼ and ⊻ buttons to change the data in order to comply each standard.
11. Press OK button to write data.
12. Turn off the power to quit service mode when completing the adjustment.

CXA1587

Item No.	Adjustment item	Data amount
01	PICTURE	53
02	COLOUR	31
03	BRIGHT	31
04	HUE	31
05	SHARPNESS	7
06	RGB PICTURE	11
07	SUB CONTRAST	ADJ.
08	SUB COLOUR	ADJ.
09	SUB BRIGHT	ADJ.
10	SUB HUE	8
11	VM LEVEL	2
12	NR LEVEL	0
13	ABL MODE	0
14	G-DRIVE	ADJ.
15	B-DRIVE	ADJ.
16	G-AUTO CUT OFF	ADJ.
17	B-AUTO CUT OFF	ADJ.
18	R-MANUAL CUT OFF	ADJ.
19	G-MANUAL CUT OFF	ADJ.
20	B-MANUAL CUT OFF	ADJ.
21	GAMMA LEVEL	0
22	DC TRANSFER RATIO	3
23	DYNAMIC PICTURE	0
24	Y FILTER ADJ.	ADJ.
25	Y DELAY TIME	15
26	Y DELAY SWITCH 1	0
27	Y DELAY SWITCH 2	1
28	SHARPNESS LIMIT	ON
29	ALL BLK	OFF
30	H SHIFT	31
31	DAC TEST	ON
32	PRE/OVER SHOOT	12
33	SHARPNESS FO	2
34	SUB SHARPNESS	3
35	R MUTE	OFF
36	G MUTE	OFF
37	B MUTE	OFF
38	AGING 1	OFF
39	AGING 2	ON
40	AKB	ON
41	INHIBIT RGB	ON
42	FORCED RGB	OFF
43	V/2 V	OFF
44	AXIS	PAL
45	HUE SW	OFF
46	V EXTENTION	OFF
47	AFC 1	1
48	AFC 2	0
49	AFC	OFF
50	REF. POSITION	0

CXD2018Q

Item No.	Adjustment item	Data amount
01	V SIZE	ADJ.
02	V SHIFT	ADJ.
03	S CORRECTION	ADJ.
04	V LINEARITY	ADJ.
05	H SIZE	ADJ.
06	PIN AMP	ADJ.
07	TILT	ADJ.
08	UPPER CORNER	ADJ.
09	LOWER CORNER	ADJ.
10	V BOW	ADJ.
11	ANGLE	ADJ.
12	HV COMP. V	12
13	HV COMP. H	8
14	FRAME SHIFT	OFF
15	FREE RUN 60 Hz	OFF
16	SYSTEM 60 Hz	OFF
17	ASPECT WIDE	OFF
18	DOUBLE SCAN	OFF
19	INTERLACE	ON
20	H SHIFT	32
21	N/S CORRECTION	ADJ.

Typical Value (OSD based) when receiving PAL Philips pattern.

TDA6612	ADJ.
Stereo-Separation	(30)

Should be adjusted twice 4:3 and 16:9 mode.

Y FILTER ADJUSTMENT

1. Input PAL RED pattern.
2. Connect an oscilloscope to CN0403 ① pin (R) on the C board.
3. Enter into service mode and press 3, 8.
4. Adjust data by △ or ▽ to minimize the chroma element of CN 0403 ① pin.

SUB BRIGHTNESS ADJUSTMENT

1. Input Phillips pattern.
2. Enter into service mode and press 23.
3. Adjust data so that 0-IRE of the grey scale and CUT-OFF 20-IRE glitter slightly.

SUB CONTRAST ADJUSTMENT

1. Input a video that contains small 100% area on the Black Back ground.
2. Enter into service mode and press 01 to have PIC max followed by 21.
3. Adjust data so that 2.5 Vp-p can be obtained at ① CN0403 (R).

SUB COLOUR ADJUSTMENT

1. Input PAL colour bar.
2. Connect an oscilloscope to CN0403 ③ pin (B) on the C board.
3. Enter into service mode and press 22 of CXA1587, 8 SUB COLOUR.
4. Adjust data so that the right sides of the waveform will be the same.

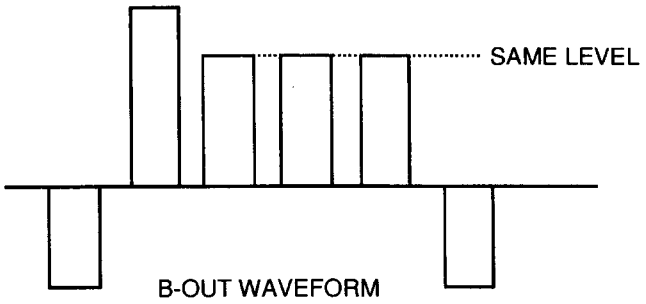

STEREO-SEPARATION ADJUSTMENT

1. Input 1 kHz stereo signal to the L-ch and 400Hz stereo signal to the R-ch.
2. Enter into service mode and press 19.
3. Adjust data so that sound does not leak to the R-ch and the L-ch.

DRIVE AND CUT OFF

See direct test mode list attached and refer to sub brightness or such for adjustment method.

BELL FILTER ADJUSTMENT (L3, L2)

1. Input PHILLIPS Signal.
2. Connect an oscilloscope to pin ⑮ of IC1 on the E2 board.
3. Adjust L3 (Bell Filter) to get a flat chroma/smooth signal. (Photo ① for reference)
4. Connect an oscilloscope to pin ② of IC1 on the E2 board.
5. Adjust L2 (B – Y) to get symmetrical transient between (R – Y) → (B – Y) and (B – Y) → (R – Y). (Photo ② for reference)
6. Connect pin ⑤ of CN2.
7. Confirm ID flip-flop output signal as below.

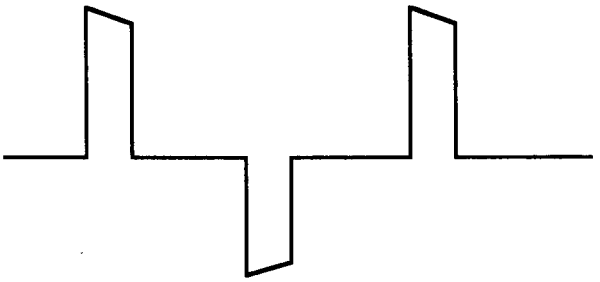

PHOTO ① BELL FILTER ADJUSTMENT (L3)

< MONITOR PIN ⑮ of IC1 Connect

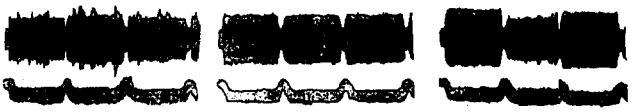

x 10 H-PULSE

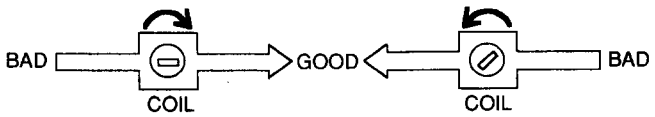

PHOTO ② COL BALANCE ADJUSTMENT (L2)

< MONITOR PIN ② of IC1 Connect

x 10 H-PULSE

DEFLECTION SYSTEM ADJUSTMENT

1. Enter into service mode and select CXD2018Q.
2. Select and adjust each item in order to get an optimum image.

Item No.	Adjustment item	Data amount
01	V SIZE	ADJ.
02	V SHIFT	ADJ.
03	S CORRECTION	ADJ.
04	V LINEARITY	ADJ.
05	H SIZE	ADJ.
06	PIN AMP	ADJ.
07	TILT	ADJ.
08	UPPER CORNER	ADJ.
09	LOWER CORNER	ADJ.
10	V BOW	ADJ.
11	ANGLE	ADJ.
12	HV COMP. V	12
13	HV COMP. H	8
14	FRAME SHIFT	OFF
15	FREE RUN 60 Hz	OFF
16	SYSTEM 60 Hz	OFF
17	ASPECT WIDE	OFF
18	DOUBLE SCAN	OFF
19	NON INTERLACE	ON
20	H SHIFT	31
21	N/S CORRECTION	ADJ.

V SIZE

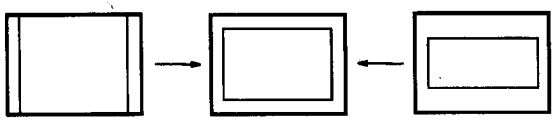

V SHIFT

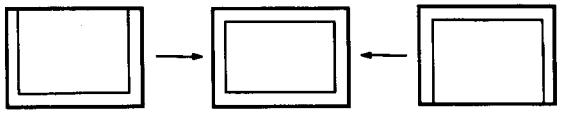

S CORRECTION

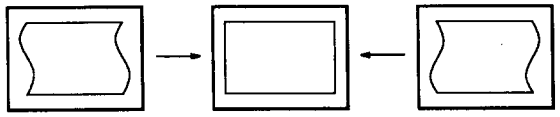

V LINEARITY

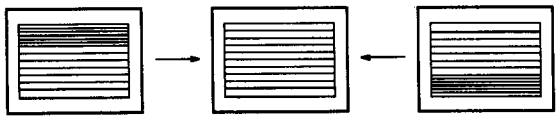

H SIZE

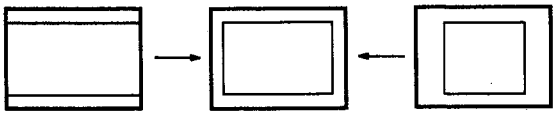

PIN AMP

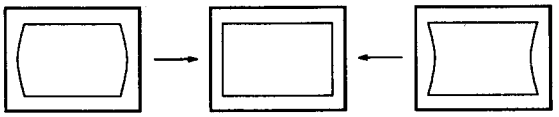

TILT

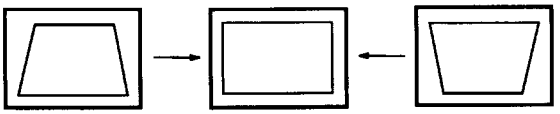

UPPER CORNER PIN

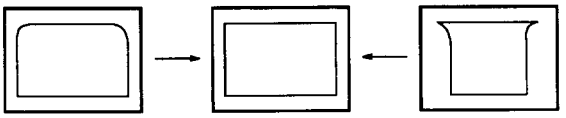

LOWER CORNER PIN

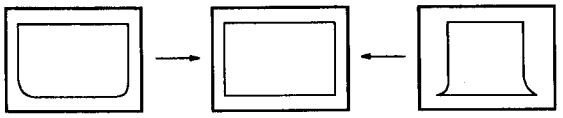

V BOW

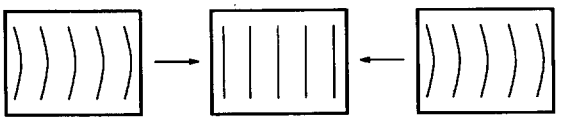

ANGLE

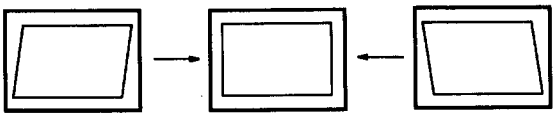

H SHIFT

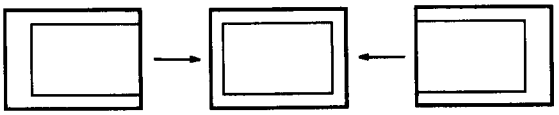

3. Press [OK] button to write the data.

If menu display may disturb the adjustment press 🔇 to clear, to resume it, press 🔇 again.

4-2. VOLUME ELECTRICAL ADJUSTMENTS

+ B (+135 V) ADJUSTMENT (RV 601)

D BOARD

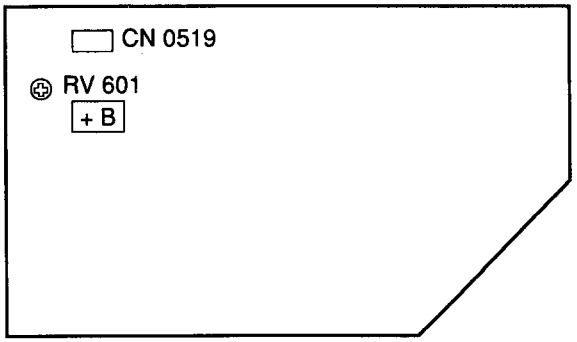

1. Turn on the power of the TV set.
2. Connect a digital multi-meter to ① pin of CN 0519 on D board.
3. Adjust RV601 on D board to + 135V.

AGC ADJUSTMENT (IF BLOCK)

A BOARD

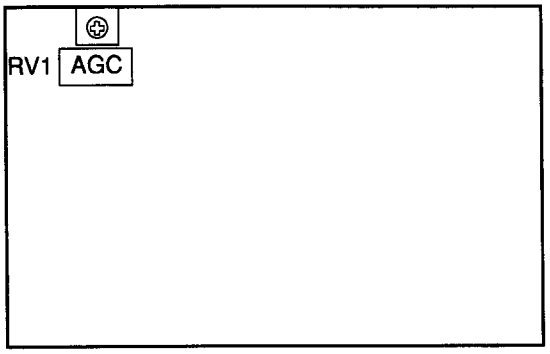

1. Receive off-air signal.
2. Adjust AGC RV1 so that there is no snow noise and cross-modulation.
3. Change receiving channel and confirm status.

4-3. TEST MODE 2:

Is available by pressing Test button twice, OSD "TT" appears. The functions described bellow are available by pressing the two numbors. To release the Test Mode 2, press twice 0, 10, 20 ... or switch TV in Standby Mode.

00	Switch Test Mode 2 off
01	Picture maximum
02	Picture minimum
03	Volume to 35%
04	Volume to 50%
05	Volume to 65%
06	Volume to 80%
07	Aging Condition (Volume min., Picture max., Brightness max., Aging 2 Mode of CXA1587.
08	Shipping Condition (Analog values are reset due to factory setting, Prog. 1 is selected, AV IN = AV1, AV OUT = TV, Volume/HP Volume = 35%, Resolution = High, Format = 4.3, PIP Pos = Top Left, PIP = OFF, TT Mode is switched off.
09	Store in the language byte OFFH. The language menu appears automatically after power on.
10	Tenth entry is deleted.
11	Balance.
12	Hue.
13	Display model overview (Destination, text mode and so on.)
14	Enable direct N/S correction adjustment by ▼ ▲.
15	Read factory setting from ROM. Read Volume, Balance, Treble, Bass, Brightness, Contrast, Hue, Sharpness, NA Doclour values from ROM to the actual used values. (Lost power memory).
16	Save actual used values as reset values. Memorize actual used Values Balance, Treble, Bass, Hue, Sharpness, Contrast, Colour, Brightness at reset position in EEPROM.
17	Preset label for AV sources.
18	Text ON/OFF (Toggle function).
19	Stereo separation.
20	Tenth entry is deleted.
21	Sub Contrast
22	Sub Colour
23	Sub Brightness
24	Double text mode enable 3 disable (Toggle function).
25	Dummy
26	West Europe (National Character set for Teletext.)
27	East Europe (National Character set for Teletext.)
28	West Europe (US) (National Character set for Teletext.)
29	West Europe (TURK) (National Character set for Teletext.)
30	Tenth entry is deleted.
31	Green Drive
32	Blue Drive
33	Green Cut Off (Auto Cut Off.)
34	Blue Cut Off (Auto Cut Off.)
35	Red Cut Off (Manual Cut Off.) (Auto Cut Off is switched off.)
36	Green Cut Off (Manual Cut Off.) (Auto Cut Off is switched off.)
37	Blue Cut Off (Manual Cut Off is switched off.)
38	Y-Filter adjustment (Trap is switched off and TDA9145 is switched in forced NTSC mode.)
39	Dummy
40	Tenth entry is deleted.
41	Default setting of CXA1587. (Only in prog. 99 available.)
42	Default setting of CXD2018Q. (Only in prog. 99 available.)
43	Default setting of CXA1526. (Only in prog. 99 available.)
44-46	Dummy
47	PIP in text: Position horizontal.
48	PIP in text: Position vertical.
49	Erase the EEPROM testbyte (This byte detects already stored NMV's) and preset by U controller. (Not the channel date.)

Note: For No. 35, 36, 37 and 38 special presetting (AKB, forced Colour Mode, Trap) is selected.
After selecting a new Test Mode Number, the AKB is switched ON, the Trap is switched On and TDA9145 is switched to Auto Search Mode.

4-4. ERROR MESSAGE

Self diagnos system can operates as follows.

- When MP can't get the acknowledge back from the device, LED starts flashing according to the table as attached.

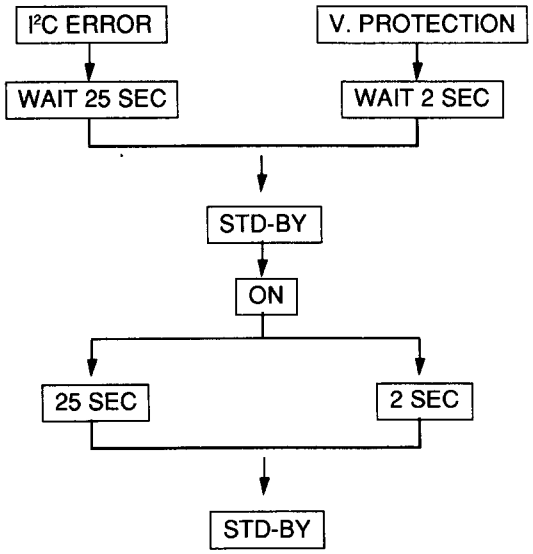

In case of more errors in parallel, the blinking error shows max. Priority according to the error number (e.g. error 2 and error 5 appears together, then LEDs shows error 2).

TABLE OF ERRORS

Error Count	Switch off time	IC TYPE	FUNCTION
1	20 sec.	II C BUS	SDA low
	RESET	24C16	EEPROM
3	20 sec.	SDA3202	Tuner PII
4	20 sec.	TDA9145	Colour decoder
5	20 sec.	CXA1587	RGB/Jungle
6	20 sec.	TDA6612	Sound processor
7	20 sec.	CXD2018Q	V deflection
8	20 sec.	CXA1545	AV switch
13	1 sec.		V protection
Stand by LED blinking			No IK return

4-5. ERROR II C BUS DIAGNOSIS SYSTEM IN AE-2B CHASSIS

For all ICs in AE- 2B chassis which are necessary to get picture and sound there is a built in error I²C Bus diagnosis system.

In case of no acknowledge bit, LED A and LED B starts blinking as shown.

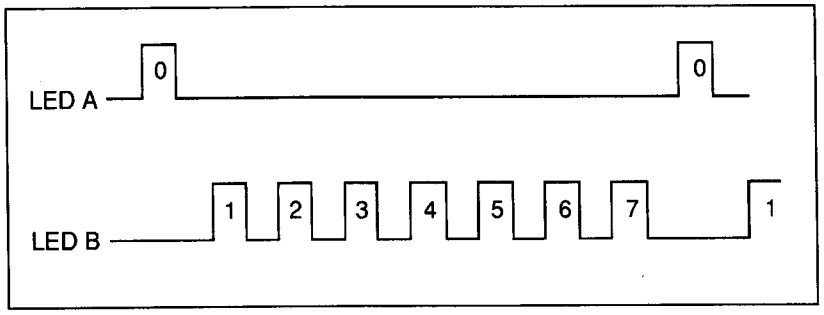

SERVICE MANUAL

AE-2B CHASSIS

MODEL	COMMANDER	DEST.	CHASSIS NO.
KV-A2941A	RM-831	Italian	SCC-G59H-A
KV-A2941B	RM-831	French	SCC-G57H-A
KV-A2941D	RM-831	AEP	SCC-G45J-A
KV-A2943E	RM-831	Spanish	SCC-G56H-A
KV-A2941K	RM-831	OIRT	SCC-G73H-A
KV-A2942U	RM-831	UK	SCC-G55F-A

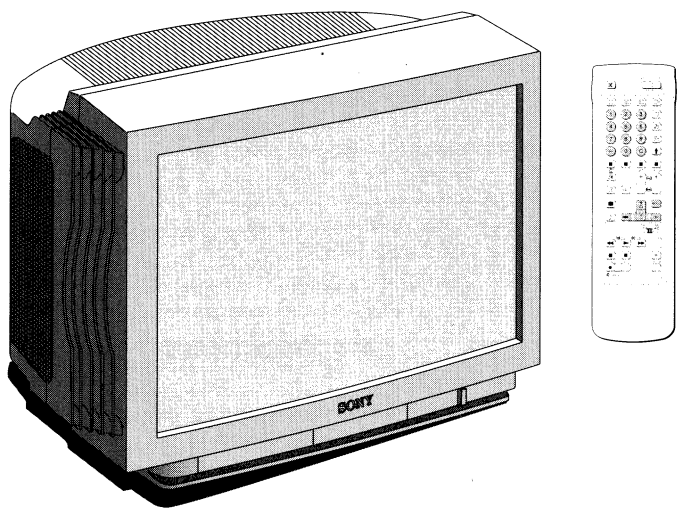

MICROFILM

TRINITRON® COLOR TV

SONY®

ITEM MODEL	Television System	Stereo System	Channel Coverage	Color System
Italian	B/G/H, D/K	GERMAN Stereo	ITALIA VHF:A-H2 (C) UHF: 21-69 PAL B/G/H VHF:E2-E12 UHF:E21-E69 CABLE TV (1):S1-S41 CABLE TV (2):S01-S05, M1-M10, U1-U10 D/K VHF:R01-R12 UHF:R21-R69	PAL, SECAM NTSC4.43, NTSC3.58 (VIDEO IN)
French	B/G/H, D/K L, I	GERMAN Stereo French Nicam	L VHF:F02-F10 UHF:F21-F60 CABLE:B-Q B/G/H VHF:E2-E12 UHF:E21-E69 CABLE TV (1):S1-S41 CABLE TV (2):S01-S05, M1-M10, U1-U10 ITALIA VHF:A-H2 (C) UHF:21-69 I UHF:B21-B69	PAL, SECAM NTSC4.43, NTSC3.58 (VIDEO IN)
AEP	B/G/H, D/K	GERMAN Stereo	PAL B/G/H VHF:E2-E12 UHF:E21-E69 CABLE TV (1):S1-S41 CABLE TV (2):S01-S05, M1-M10, U1-U10 ITALIA VHF:A-H2 (C) UHF:21-69 D/K VHF:R01-R12 UHF:R21-R69	PAL, SECAM NTSC4.43, NTSC3.58 (VIDEO IN)
Spanish	B/G/H, D/K	GERMAN/NICAM Stereo	PAL B/G VHF:E2-E12 UHF:E21-E69 CABLE TV (1):S1-S41 CABLE TV (2):S01-S05, M1-M10, U1-U10 ITALIA VHF:A-H2 (C) UHF:21-69 D/K VHF:R01-R12 UHF:R21-R69	PAL, SECAM NTSC4.43, NTSC3.58 (VIDEO IN)
OIRT	B/G/H, D/K	GERMAN Stereo	B/G/H VHF:E2-E12 UHF:E21-E69 CABLE TV (1):S1-S41 D/K VHF:R01-R12 UHF:R21-R69	PAL, SECAM NTSC4.43, NTSC3.58 (VIDEO IN)
UK	I	NICAM Stereo	UHF : B21-B69	PAL, SECAM NTSC4.43, NTSC3.58 (VIDEO IN)

MODEL	Italian	French	AEP	Spanish	OIRT	UK
Power Consumption	119W	132W	137Wh	140Wh	137Wh	193W

SPECIFICATIONS

Picture Tube — Super Trinitron
Approx. 72 cm (29 inches)
(Approx. 68 cm picture measured diagonally)
110° -deflection

Input/Output Terminals

[REAR]

1 21-pin Euro connector (CENELEC standard)
- inputs for audio and video signals
- inputs for RGB
- outputs of TV video and audio signals

2/S 2 21-pin Euro connector
- inputs for audio and video signals
- inputs for S video
- outputs for audio and video signals (selectable)

Audio outputs (variable) - phono jacks
- Ext Left/Right speaker terminals.
- Center and Surround speaker terminals.

[FRONT]

3 Video input - phono jack
Audio inputs - phono jacks
3 S video input 4-pin DIN
Ω Headphone jacks : stereo minijack

Sound output — 3 x 15W RMS (LRC)
2 x 30W Music Power (LRC)
2 x 4W RMS (S)
2 x 15W Music Power (S)

Power requirements — 220 - 240V
Dimensions — Approx. 762x557x546 mm
Weight — Approx. 55kg
Supplied accessories — RM-831 Remote Commander (1)
IEC designation R6 battery (1)
Center Speaker (1)
Surround Speakers (2)
Other features — NICAM , FASTEXT.

[RM-831]

Remote control system — Infrared control
Power requirements — 1.5V dc
1 battery IEC designation R6 (size AA)
Dimensions — Approx. 65x225x21 mm (w/h/d)
Weight — Approx. 157g (Not including batteries)

Design and specifications are subject to change without notice.

Item \ Model name	KV-A2941A	KV-A2941B	KV-A2941D	KV-A2943E	KV-A2941K	KV-A2942U
Pal Comb	OFF	OFF	OFF	OFF	OFF	OFF
PIP	OFF	OFF	OFF	OFF	OFF	OFF
RGB Priority	ON	ON	OFF	OFF	OFF	OFF
Graphic Equalizer	ON	ON	ON	ON	ON	ON
Dolby	ON	ON	ON	ON	ON	ON
Scart 1	ON	ON	ON	ON	ON	ON
Scart 2	ON	ON	ON	ON	ON	ON
Front in (3)	ON	ON	ON	ON	ON	ON
Dyn. Convergence	OFF	OFF	OFF	OFF	OFF	OFF
Projector	OFF	OFF	OFF	OFF	OFF	OFF
AKB in 16:9 mode	ON	ON	ON	ON	ON	ON
Norm B/G	ON	ON	ON	ON	ON	OFF
Norm I	OFF	ON	OFF	OFF	OFF	ON
Norm D/K	ON	ON	ON	ON	ON	OFF
Norm AUS	OFF	OFF	OFF	OFF	OFF	OFF
Norm L	OFF	ON	OFF	OFF	OFF	OFF
Norm SAT	OFF	OFF	OFF	OFF	OFF	OFF
Norm M	OFF	OFF	OFF	OFF	OFF	OFF
Language Preset	Italiano	Francais	Deutsch	None	OIRT	English

WARNING (KV-A2942U only)

The flexible mains lead is supplied connected to a **B.S. 1363** fused plug having a fuse of **5 AMP** capacity. Should the fuse need to be replaced, use a **5 AMP FUSE** approved by **ASTA** to **BS 1362**, ie one that carries the ASTA mark.
IF THE PLUG SUPPLIED WITH THIS APPLIANCE IS NOT SUITABLE FOR YOUR SOCKET OUTLETS IN YOUR HOME.
IT SHOULD BE CUT OFF AND AN APPROPRIATE PLUG FITTED.
THE PLUG SEVERED FROM THE MAINS LEAD MUST BE DESTROYED AS A PLUG WITH BARED WIRES IS DANGEROUS IF ENGAGED IN A LIVE SOCKET OUTLET.
When an alternative type of plug is used it should be fitted with a **5 AMP FUSE**, otherwise the circuit should be protected by a **5 AMP FUSE** at the distribution board.

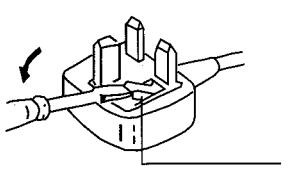

How to replace the fuse.
Open the fuse compartment with the screwdriver blade
and replace the fuse.

21 pin connector (1 2 / 4)

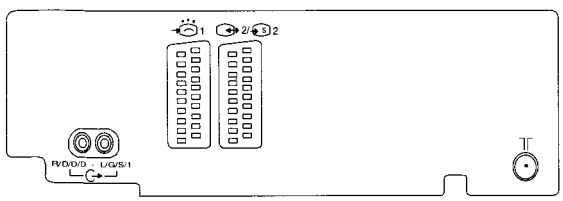

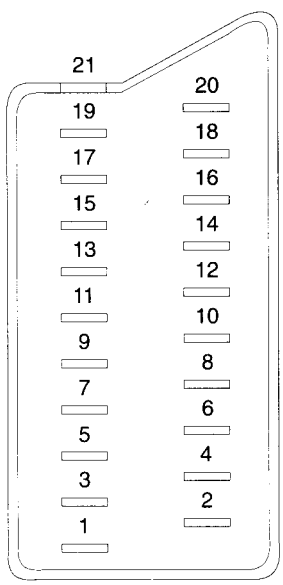

Pin No.	1	2	4	Signal	Signal level
1	○	○	○	Audio output B (right)	Standard level : 0.5V rms Output impedance :Less than 1kohm*
2	○	○	○	Audio input B (right)	Standard level : 0.5V rms Output impedance :More than 10kohm*
3	○	○	○	Audio output A (left)	Standard level : 0.5V rms Output impedance :Less than 1kohm*
4	○	○	○	Ground (audio)	
5	○	○	○	Ground (blue)	
6	○	○	○	Audio input A (left)	Standard level : 0.5V rms Output impedance :More than 10kohm*
7	○	●	●	Blue input	0.7 ± 3dB, 75 ohms, positive
8	○	○	○	Function select (AV control)	High state (9.5 - 12V) : Part mode Low state (0 - 2V) : TV mode Input impedance : More than 10k ohms Input capacitance : Less than 2nF
9	○	○	○	Ground (green)	
10	○	○	○	Open	
11	○	●	●	Green	Green signal : 0.7 ± 3dB, 75 ohms, positive
12	○	○	○	Open	
13	○	○	○	Ground (red)	
14	○	○	○	Ground(blanking)	
15	○	—	—	Red input	0.7 ± 3dB, 75 ohms, positive
	—	○	○	(S signal) croma input	0.3 ± 3dB, 75 ohms, positive
16	○	●	●	Blanking input (Ys signal)	High state (1 - 3V) Low state (0 - 0.4V) Input impedance : 75ohms
17	○	○	○	Ground(video output)	
18	○	○	○	Ground(video input)	
19	○	○	○	Video output	1V ± 3dB,75ohms,positive sync:0.3V(-3+10dB)
20	○	—	—	Video input	1V ± 3dB,75ohms,positive sync:0.3V(-3+10dB)
	—	○	○	Video input Y (S signal)	1V ± 3dB,75ohms,positive sync:0.3V(-3+10dB)
21	○	○	○	Common ground (plug, sheild)	

○ Connected ● Not Connected (open) * at 20Hz - 20kHz

Pin No	Signal	Signal level
1	Ground	
2	Ground	
3	Y (S signal) input	1V ± 3dB 75 ohm , positive Sync. 0.3V -3/+10 dB
4	C (S signal) input	0.3V ± 3dB 75 ohm , positive Sync.

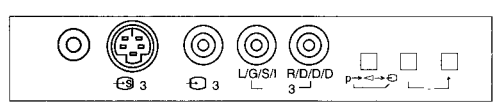

TABLE OF CONTENTS

Section	Title	Page
1. GENERAL		
	Overview	6
	Step 1 - Preparation	7
	Step 2 - Connection	7
	Step 3 - Tuning in to TV stations	8
	Additional Presetting Functions	9
	Watching the TV	11
	Adjusting and Setting the TV Using the Menu	12
	Teletext	15
	Connecting and Operating optional Equipment	18
2. DISASSEMBLY		
2-1.	Rear Cover Removal	22
2-2.	Chassis Assy Removal	22
2-3.	Service Position	23
2-4.	Extension Boards	23
2-5.	M2 and A3 Board Removal	24
2-6.	D4 and D5 Board Removal	24
2-7.	J and K1 Board Removal	25
2-8.	F Bracket Removal	25
2-9-1.	Wire Dressing	26
2-9-2.	Wire Dressing	26
2-10.	Picture Tube Removal	27
3. SET-UP ADJUSTMENTS		
3-1.	Beam Landing	28
3-2.	Convergence	29
3-3.	Focus	31
3-4.	White Balance	31
4. CIRCUIT ADJUSTMENTS		
4-1.	Electrical Adjustments	32
4-2.	Volume Electrical Adjustments	36
4-3.	Test Mode 2	37
4-4.	Error Message	38
4-5.	Error I^2C Bus Diagnosis System in AE-2B Chassis	38
5. DIAGRAMS		
5-1.	Block Diagram (1)	39
	Block Diagram (2)	44
5-2.	Circuit Board Location	49
5-3.	Schematic Diagrams and Printed Wiring Boards	49
	* H1 Board	50
	* H2 Board	50
	* F2 Board	50
	* F1 Board	50
	* J Board	54
	* A Board	59
	* M2 Board	66
	* D Board	70
	* A3 Board	74
	* C Board	77
	* VM Board	77
	* D5 Board	78
	* K1 Board	78
	* D4 Board	81
	* IF Board	82
5-4.	Schematic Diagram of Tuner	89
5-5.	Semiconductors	90
6. EXPLODED VIEWS		
6-1.	Chassis	92
6-2.	Picture Tube	93
7. ELECTRICAL PARTS LIST		94

CAUTION

SHORT CIRCUIT THE ANODE OF THE PICTURE TUBE AND THE ANODE CAP TO THE METAL CHASSIS, CRT SHIELD, OR CARBON PAINTED ON THE CRT, AFTER REMOVAL OF THE ANODE CAP.

WARNING !!

AN ISOLATING TRANSFORMER SHOULD BE USED DURING ANY SERVICE WORK TO AVOID POSSIBLE SHOCK HAZARD, DUE TO A LIVE CHASSIS. THE CHASSIS OF THIS RECEIVER IS DIRECTLY CONNECTED TO THE AC POWER LINE.

SAFETY-RELATED COMPONENT WARNING !!

COMPONENTS IDENTIFIED BY SHADING AND MARKED ! ON THE SCHEMATIC DIAGRAMS, EXPLODED VIEWS AND IN THE PARTS LIST ARE CRITICAL FOR SAFE OPERATION. REPLACE THESE COMPONENTS WITH SONY PARTS WHOSE PART NUMBERS APPEAR AS SHOWN IN THIS MANUAL OR IN SUPPLIMENTS PUBLISHED BY SONY.

ATTENTION

APRES AVOIR DECONNECTE LE CAP DE L'ANODE, COURT-CIRCUITER L'ANODE DU TUBE CATHODIQUE ET CELUI DE L'ANODE DU CAP AU CHASSIS METALLIQUE DE L'APPAREIL, OU AU COUCHE DE CARBONE PEINTE SUR LE TUBE CATHODIQUE OU AU BLINDAGE DU TUBE CATHODIQUE.

ATTENTION !!

AFIN D'EVITER TOUT RISQUE D'ELECTROCUTION PROVENANT D'UN CHÁSSIS SOUS TENTION, UN TRANSFORMATEUR D'ISOLEMENT DOIT ETRE UTILISÈ LORS DE TOUT DÈPANNAGE. LE CHÁSSIS DE CE RÈCEPTEUR EST DIRECTEMENT RACCORDÈ Á L'ALIMENTATION SECTEUR.

ATTENTION AUX COMPOSANTS RELATIFS Á LA SÈCURITÈ !!

LES COMPOSANTS IDENTIFIÈS PAR UNE TRAME ET PAR UNE MARQUE ! SUR LES SCHÈMAS DE PRINCIPE, LES VUES EXPLOSÈES ET LES LISTES DE PIECES SONT D'UNE IMPORTANCE CRITIQUE POUR LA SÈCURITÈ DU FONCTIONNEMENT, NE LES REMPLACER QUE PAR DES COMPOSANTS SONY DONT LE NUMÈRO DE PIÈCE EST INDIQUÈ DANS LE PRÈSENT MANUEL OU DANS LES SUPPLÈMENTS PUBLIÈS PAR SONY.

SECTION 1 GENERAL

The operating instructions mentioned here are partial abstracts from the Operating Instruction Manual. The page numbers of the Operating Instruction Manual remain as in the manual.

Overview

This section briefly describes the buttons and controls on the TV set and on the Remote Commander. For more information, refer to the pages given next to each description.

TV set - front

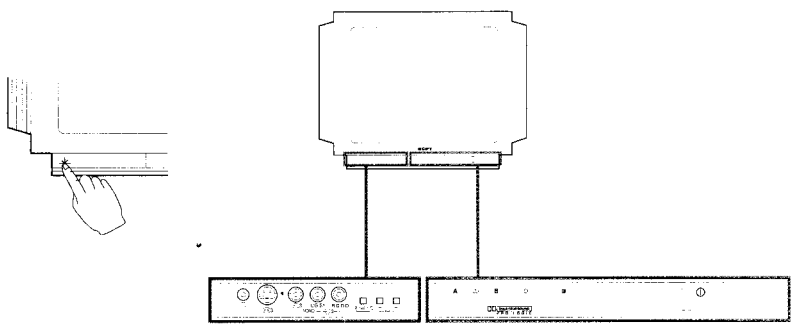

Symbol	Name	Refer to page
⏻	Main power switch	42
⏻	Standby indicator	42
A-CD-B	Stereo A/B indicators	44
∩	Headphones jack	50
S 3, 3, 3	Input jacks (S-video/video/audio)	50
P	Function selector (Programme/volume/input)	42
− +	Adjustment buttons for function selector	42

Remote Commander RM-831

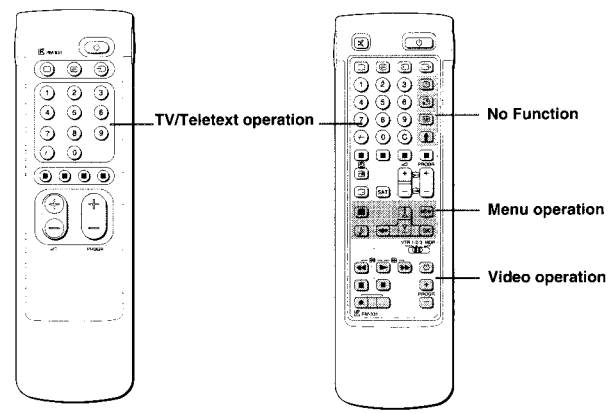

Simple side

Full-Function side

Note
The SAT button does not operate with this TV.

TV/Teletext operation

Symbol	Name	Refer to Page
🔇	Mute on/off button	43
⏻	Standby button	42
🖵	TV power on/TV mode selector button	42
☰	Teletext button	43
	Input mode selector	43
	Output mode selector	51
1,2,3,4,5,6, 7,8,9, and 0	Number buttons	42
–/– –	Double-digit entering button	42
C	Direct channel entering button	39
+/–	Volume control button	42
PROGR +/–	Programme selectors	42
	Teletext page access buttons	47
●	Picture adjustment button	44
♪	Sound adjustment button	44
	On-screen display button	43
	Teletext hold button	47
	Time display button	43
■■■■	Fastext buttons	47

Menu operation

Symbol	Name	Refer to Page
MENU	Menu on / off button	36
△+/▽–	Select buttons	36
OK	OK (confirming) button	36
←	Back button	36

Video operation

Symbol	Name	Refer to Page
VTR1/2/3 MDP	Video equipment selector	52
◀◀ ▶ ▶▶ ■ ❚❚ ● ⏻ PROGR +/–	Video equipment operation buttons	52

Getting Started

Step 1 Preparation

Insert the battery into the Remote Commander

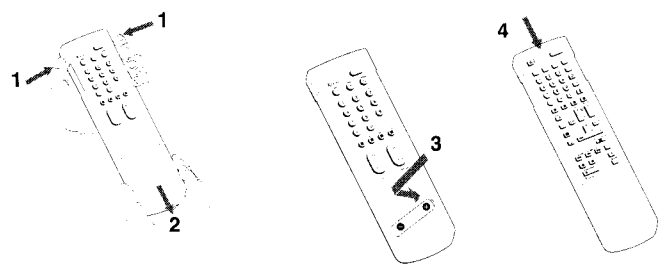

Remove the cover.

Check the correct polarity.

Refit the outside cover making sure that the Full-Function side is visible to use the menu in Step 3.

Note: Connect the speakers using the leads provided making sure to observe the following polarity:-
The striped lead is (+) and should be connected to the red terminal on the speaker.
The black lead is (-) and should be connected to the black terminal on the speaker
Note: If you don't connect the centre speaker, set the "Centre Mode" to "Phantom". For details, refer to page 46.

Note: If you prefer to use your own speakers , make sure they are at least 8Ω impedance and are magnetically shielded otherwise picture distortion may occur.

Step 2 Connection

❶ Connect the aerial

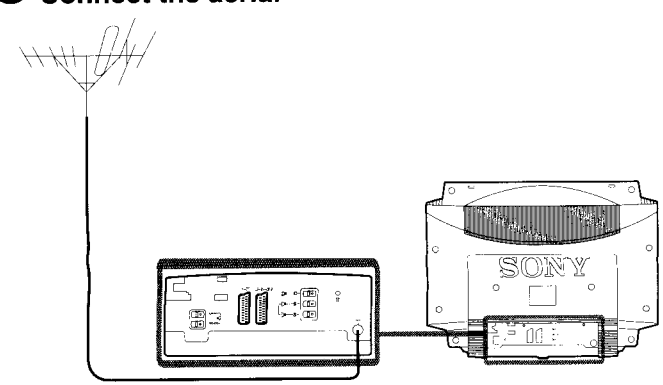

Fit an IEC aerial connector attached to 75-ohm coaxial cable (not supplied) to the ⅄ socket at the rear of the TV.

❷ Connecting the speakers

Dolby Pro Logic (*) Surround requires normally 5 speakers, whose functions are as follows:
Centre speaker: to anchor the stable sound image, like dialogue, to the TV screen.
Left and Right front speakers: for the normal two-channel stereo broadcasts.
Surround speakers: for the special effects created by the surround channel.

To obtain the full benefit of your Dolby Pro Logic Surround TV, the speakers should be positioned as shown below:

Before switching on: connect the speakers to the TV set.

a. Connect the speakers provided only:-

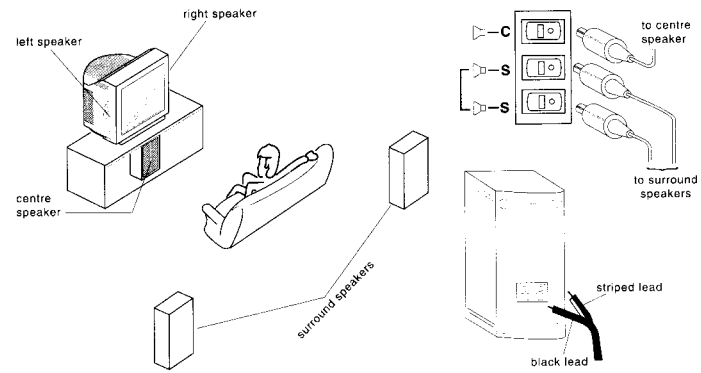

b. Connect your own speakers:-

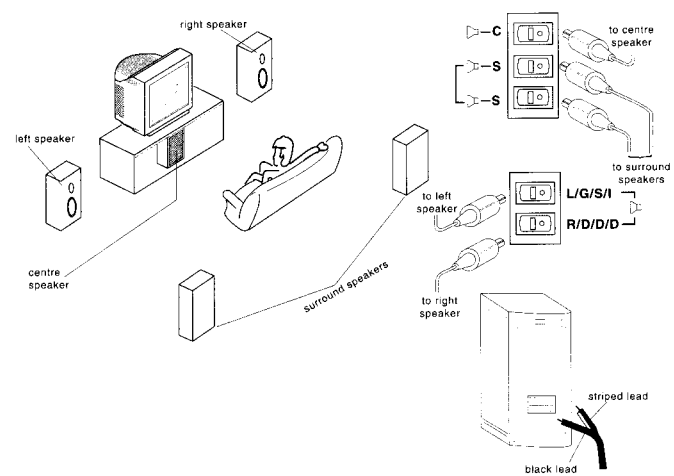

(*) Manufactured under license from Dolby Laboratories Licensing Corporation. DOLBY and the double-D symbol □□ are trademarks of Dolby Laboratories Licensing Corporation.

Step 3 Tuning in to TV Stations

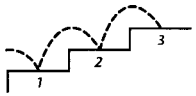

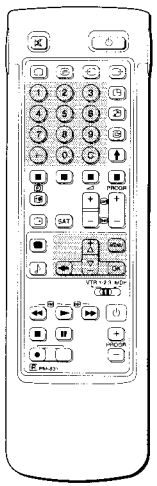

Once you have set up the TV, you can choose the language of the menu. Then you should preset the channels (up to 60 channels) by choosing either the automatic or manual method.

The automatic method is easier if you want to preset all receivable channels at once. Use the manual method if you only have a few channels and want to preset channels one by one. The manual method is also convenient for allocating programme numbers to various video input sources.

Before you begin

- Check that the Full-Function side of the Remote Commander is visible.
- Locate Menu operation buttons on the Remote Commander. They are shaded in the illustration at the left.

❶ Choose a language

1 Depress ⏻ on the TV.
The TV will switch on. If the standby indicator on the TV is lit, press ⎔ or a number button on the Remote Commander.

2 Press the MENU button.
The LANGUAGE menu appears. (See Fig. 1)

3 Select the language you want with △+ or ▽–, and then press OK.

Fig. 1.

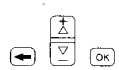

❷ Display the Menu

Press the ⬅ button.
The main menu appears. (See Fig. 2)

Now, choose one of the methods described overleaf:

"Preset Channels Automatically"

or

"Preset Channels Manually".

Fig. 2.

To go back to main menu:
Keep pressing ⬅.

To go back to the normal TV picture:
Press MENU. Normal TV picture will be restored after one minute if menu functions are not selected.

Note on the Demo function:
If you choose Demo on the main menu, you can see a demonstration of the menu functions.
Press MENU to stop the function.

With this method, you can preset all receivable channels at once.

To stop automatic channel presetting:
Press ⬅ on the Remote Commander.

Notes:
• After presetting the channels automatically, you can check which channels are stored on which programme positions. For details, see "Using the Programme Table" on page 43.

• You can sort the programme positions to have them appear on screen in the order you like. For details, see "Sorting Programme Positions" on page 39.

• Programme names are automatically taken from Teletext if available. If not please refer to page 40 "Captioning a station name" for further information.

❸ Preset channels automatically

1 Select Preset with △+ or ▽– and press OK.
The PRESET menu appears. (See Fig. 3.)

2 Select Auto Programme with △+ or ▽– and press OK.
The AUTO PROGRAMME menu appears. (See Fig. 4.)

3 Press OK.
Select if necessary the TV broadcast system with △+ or ▽– and press OK. (B/G for western European countries, D/K for eastern European countries) The first element of the "PROG" number will be highlighted.

4 Select the programme (number button) from which you want to start presetting. Select the first element of the double-digit number with △+ or ▽– and press OK or select with the number buttons (e.g. For "04", select "0" here).
The second element of "PROG" is highlighted.

5 Select the second element of the double-digit number with △+ or ▽– or the number buttons (e.g. For "04", select "4" here) (See Fig. 5.) and press OK.

6 Select "C" or "S" with △+ or ▽– and press OK. The automatic channel presetting starts.
When presetting is finished, the preset menu reappears. All available channels are now stored on successive number buttons. (Press MENU to restore normal TV picture).

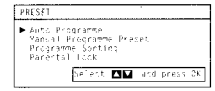

Fig. 3.

Fig. 4.

Fig. 5.

Use this method if there are only a few channels in your area to preset or if you want to preset channels one by one. You may also allocate programme numbers to various video input sources.

If you have made a mistake:
Press ⬅ to go back to the previous position.
To go back to main menu
Keep pressing ⬅.
To go back to the normal TV picture
Press MENU.

To tune in a channel by frequency:
After selecting F in step 5, enter three digits using the number buttons.
Press OK.

❸ Preset channels manually

1 Select Preset with △+ or ▽– and press OK.
The PRESET menu appears. (See Fig. 6.)

2 Select Manual Programme Preset with △+ or ▽– and press OK.
The MANUAL PROGRAMME PRESET menu appears. (See Fig. 7.)

3 Using △+ or ▽–, select the programme position (number button) to which you want to preset a channel, and press OK.
Keep pressing ▽– to select programme numbers higher than 10.

4 Select if necessary the TV broadcast system (B/G for western European countries, D/K for eastern European countries) or a video input source (EXT) with △+ or ▽–. Then press OK. The CH position will be highlighted. (See Fig. 8.)

5 Using △+ or ▽–, select C (to preset a regular channel), or F (to tune in by frequency), or S (cable channel) and press OK.
The first element of the "CH" number is highlighted.
If you have selected EXT in step 4, select the video input source with △+ or ▽–. (See Fig. 9.)

There are two ways to preset channels. If you know the channel number, go to step "6-Manual",

or

if you don't know the channel number, go to step "6- Search".

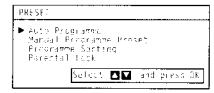

Fig. 6.

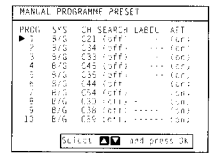

Fig. 7.

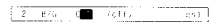

Fig.8.

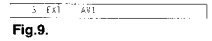

Fig.9.

If you have made a mistake:
Press ⬅ to go back to the previous position.
To go back to main menu
Keep pressing ⬅.
To go back to the normal TV picture
Press MENU.

6 ***Manual***

-a Select the first element of the "CH" number with △+ / ▽– and press OK or select with the number buttons.
The second element of the "CH" number is highlighted.

-b Select the second element of the number with △+ / ▽– or the number buttons.
The selected number appears. (See Fig. 10.)

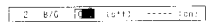
Fig.10.

Fig.11.

-c Press OK
The "SEARCH" position is highlighted and the selected channel is now stored. (See Fig. 11.)

-d Press OK until the cursor appears by the next programme position.

-e Repeat steps 3 to 6 to preset other channels.

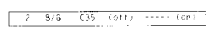
Fig.12.

Fig.13.

6 ***Search***

-a Press OK repeatedly until the colour of the SEARCH position changes.

-b Start searching for the channel with △+ (up) or ▽– (down).
The CH position changes colour. (See Fig. 12.)
The CH number starts counting up or downwards. When a channel is found, it stops. (See Fig. 13.)

-c Press OK if you want to store this channel. If not, press △+ or ▽– to continue channel searching.

-d Press OK until the cursor appears by the next programme position.

-e Repeat steps 3 to 6 to preset other channels.

4 Presetting Dolby Pro Logic

To adjust the individual speaker level:
see page 46.

To enjoy the programmes encoded in Dolby Surround, preset the Digital Surround mode to Dolby Pro Logic.

1 Press ♪ on the Remote Commander.
The SOUND CONTROL menu appears (Fig. 14).

2 Using △+ or ▽– select Digital Surround then press OK.
The current mode appears.

3 Using △+ or ▽– select Dolby Pro Logic then Press OK.
The Surround mode is set to Dolby Pro Logic.

4 Press MENU to return to the normal screen.

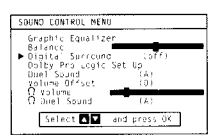

Fig. 14.

Additional Presetting Functions

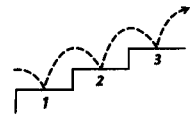

This section shows you additional presetting functions such as sorting or skipping programme positions, captioning a station name, manual fine-tuning, and using the parental lock.

Before you begin

- Check that the Full Function side of the Remote Commander is visible
- Locate the Menu operation buttons.

Sorting Programme Positions

With this function, you can sort the programme positions to a preferable order.

PROGRAMME SORTING

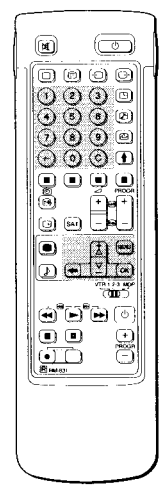

For higher programme positions:
The display scrolls automatically.

If you have made a mistake:
Press ⬅ to go back to the previous position.
To go back to main menu:
Keep pressing ⬅.
To go back to the normal TV picture:
Press MENU.

1 Press MENU to display the main menu.

2 Select Preset with △+ or ▽– and press OK.
The PRESET menu appears.

3 Select Programme Sorting with △+ or ▽– and press OK.
The PROGRAMME SORTING menu appears. (See Fig. 15.)

4 Using △+ or ▽–, select the programme position you want to move to another programme position and press OK.
The colour of the selected position changes. (See Fig. 16.)

5 Using △+ or ▽–, select the programme position to which you want to move the selected programme and press OK. Now the two programme positions have been sorted. (See Fig. 17.)

6 Repeat steps 4 and 5 to exchange other programme positions.

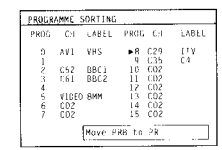

Fig. 15.

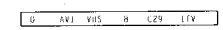

Fig. 16.

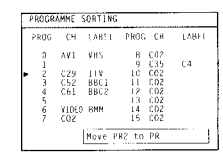

Fig. 17.

Tuning in a Channel Temporarily

You can tune in a channel temporarily, even when it has not been preset. Use the buttons on the Full-Function side of the Remote Commander.

1 Press C on the Remote Commander. For cable channels, press C twice.
The indication "C" ("S" for cable channels) appears on the screen.

2 Enter the double-digit channel number using the number buttons (e.g. for channel 4, first press 0, then 4).

MANUAL PROGRAMME PRESET

Skipping Programme Positions

You can skip unused programme positions when selecting programmes with the PROGR +/- buttons. However, the skipped programmes may still be called up when you use the number buttons.

1 Press MENU to display the main menu.

2 Select Preset with △+ or ▽– and press OK.
The PRESET menu appears.

3 Select Manual Programme Preset with △+ or ▽– and press OK.
The MANUAL PROGRAMME PRESET menu appears. (See Fig.18.)

4 Using △+ or ▽–, select the programme position which you want to skip and press OK.
The "SYSTEM" position changes colour.

5 Press △+ or ▽– until – – – appears in the SYSTEM position. (See Fig. 19.)

6 Press OK. (See Fig. 20.)
When you select programmes using the PROGR +/– buttons, the programme position will be skipped.

7 Repeat steps 4 to 6 to skip other programme positions.

PROGR
+
–

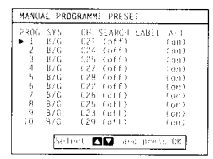

Fig. 18.

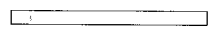

Fig. 19.

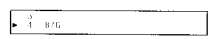

Fig. 20.

MANUAL PROGRAMME PRESET

Captioning a Station Name

Programme names are automatically taken from Teletext if available. However you can also "name" a channel or an input video source using up to five characters (letters or numbers) to be displayed on the TV screen (e.g. BBC1). Using this function, you can easily identify which channel or video source you are watching.

1 Press MENU to display the main menu.

2 Select Preset with △+ or ▽– and press OK.
The PRESET menu appears.

3 Select Manual Programme Preset with △+ or ▽– and press OK.
The MANUAL PROGRAMME PRESET menu appears. (See Fig. 21.)

4 Using △+ or ▽–, select the programme position you want to caption and press OK repeatedly until the first element of the LABEL position is highlighted.

5 Select a letter or number with △+ or ▽– and press OK.The next element will be highlighted.
Select other characters in the same way. If you want to leave an element blank, select – and press OK. (See Fig. 22.)

6 After selecting all the characters, press OK repeatedly until the cursor appears by the next programme position (at the left margin). Now the caption you chose is stored. (See Fig. 23.)

7 Repeat steps 5 and 6 to caption names for other channels.

If you have made a mistake:
Press ← to go back to the previous position.

To go back to main menu:
Keep pressing ←.

To go back to the normal TV picture:
Press MENU.

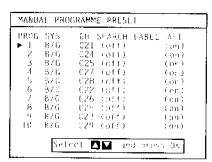

Fig. 21.

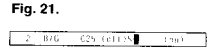

Fig. 22.

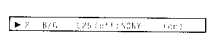

Fig. 23.

MANUAL PROGRAMME PRESET

Manual Fine-Tuning

Normally, the AFT(automatic fine-tuning) is already operating. However, if the picture is distorted, you can use the manual fine tuning function to obtain better picture reception.

1 Press MENU to display the main menu.

2 Select Preset with △+ or ▽– and press OK.
The PRESET menu appears.

3 Select Manual Programme Preset with △+ or ▽– and press OK.
The MANUAL PROGRAMME PRESET menu appears. (See Fig. 24.)

4 Using △+ or ▽–, select the programme position corresponding to the channel which you want to manually fine-tune, and press OK repeatedly until the AFT position changes colour.

5 Fine-tune the channel with △+ or ▽– so that you get the best TV reception. As you press the cursor buttons, the frequency changes from –15 to +15. (See Fig. 25.)

6 After fine tuning, press OK.
The cursor appears beside the next programme position (at the left margin). (See Fig. 26.) Now the fine-tuned level is stored.

7 Repeat steps 4 to 6 to fine-tune other channels.

To reactivate AFT (automatic fine tuning):
Repeat from the beginning and select "ON" in step 5.

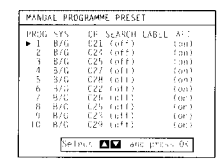

Fig. 24.

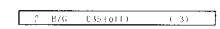

Fig. 25.

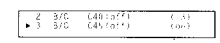

Fig. 26.

PARENTAL LOCK

Parental Lock

You can prevent undesirable broadcasts from appearing on the screen. We suggest you use this function to prevent children from watching programmes which you consider unsuitable.

1 Press MENU to display the main menu.

2 Select Preset with △+ or ▽– and press OK.
The PRESET menu appears.

3 Select Parental Lock with △+ or ▽– and press OK.
The PARENTAL LOCK menu appears. (See Fig. 27.)

4 Using △+ or ▽–, select the programme position you want to block and press OK.
The CH and LABEL, of the selected programme number, change colour indicating that this programme is now blocked.
(See Fig. 28.)

5 Repeat step 4 to block other programme positions.

Cancelling blocking

1 On the PARENTAL LOCK menu, select the programme position you want to unblock with △+ or ▽–.

2 Press OK.
The CH and LABEL change to normal colour indicating that the blocking has been cancelled.

If you try to select a programme that has been blocked:
The message "LOCKED" appears on the blank TV screen.

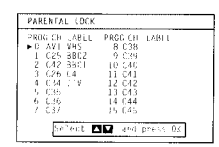

Fig. 27.

Fig. 28.

Operating Instructions

Watching the TV

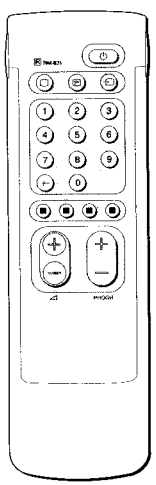

If no picture appears when you depress ⏻ on the TV

and if the standby indicator on the TV is lit, the TV is in standby mode. Press ▢ or one of the number buttons to switch it on.

This section explains the basic functions you use while watching TV. Most of the operations can be done using the simple side of the Remote Commander.

Switching the TV on and off

Switching on

Depress ⏻ on the TV.

Switching off temporarily

Press ⏻ on the Remote Commander.
The TV enters standby mode and the standby indicator on the front of the TV lights up.

To switch on again

Press ▢, PROGR +/–, or one of the number buttons on the Remote Commander.

Switching off completely

Depress ⏻ on the TV.

Selecting TV Programmes

Press PROGR +/– or press number buttons.

To select a double-digit number

Press –/– –, then the numbers.
For example, if you want to choose 23, press –/– –, 2, and 3.

Adjusting the Volume

Press ◿ +/–.

Operating the TV Using the Buttons on the TV

With the buttons on the TV, you can select programmes, adjust the volume, and select video input sources.

- Press P→◿→⊕ button repeatedly until the programme number, ◿ (for volume), or ⊕ (for video input picture) appears. Then adjust with the –/+ buttons.
- Press –/+ buttons to switch on the TV from the standby mode.
- Press –/+ simultaneously to reset picture and sound controls to the factory preset level (RESET symbol →•← is displayed).

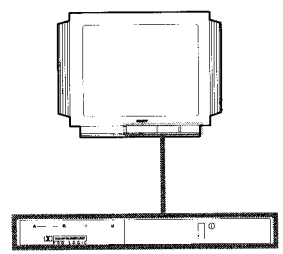

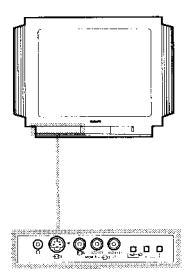

For details of the teletext operation, refer to page 47.

For details of the video input picture, refer to page 51.

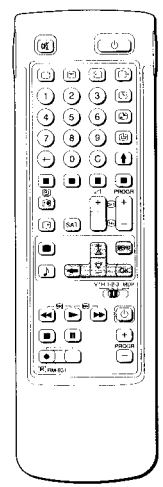

To make the Programme Table disappear
Press MENU.

Watching Teletext or Video Input

Watching teletext

- Press ⊜ to view the teletext.
- Press three number buttons to select a page.
- Press one of the coloured buttons for fastext operation.
- Press ⊜ (PAGE +) or ⊜ (PAGE –) for the next or preceeding page.
- To go back to the normal TV picture, press ▢.

Watching a video input picture

Press ⊕ repeatedly until the desired video input appears. To go back to the normal TV picture, press ▢.

Starlight Music mode

When you connect an audio source (e.g. CD player) to ⊕3 of the front and select ⊕3 or ⊕S3, this TV automatically goes into the Starlight Music mode. In this mode, the Graphic Equalizer appears for a while leaving a starlight scene to indicate that the TV is still on.
This mode may appear in other cases when the video signal of ⊕3 or ⊕S3 is absent.

More Convenient Functions

Use the Full-Function side of the Remote Commander.

Displaying the on screen indications

- Press ⊕ once to display all the indications. They will disappear after some seconds.
- Press ⊕ twice to have the programme number and label stay on screen. Press twice again to make indications disappear.

Muting the sound.

Press 🔇.
To resume normal sound, press 🔇 again.

Displaying the time

Press ⏲. This function is available only when teletext is broadcast.
To make the time display disappear, press ⏲ again.

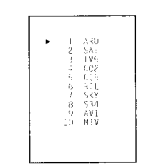

Fig.29.

Displaying of the Programme Table

Press OK. A Programme Table will be displayed on the right side of the TV screen (See. Fig.29)

Selecting of TV programmes

Press PROGR +/- or select the desired programme position using △+ or ▽– and press OK.

Adjusting and Setting the TV Using the Menu

PICTURE CONTROL

SOUND CONTROL

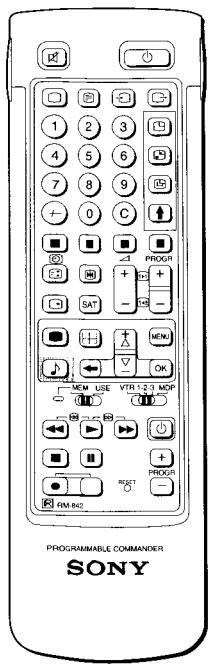

If you have made a mistake:
Press ← to go back to the previous position.
To go back to the main menu:
Keep pressing ←.
To go back to the normal TV picture:
Press MENU.

Note:
HUE is only available for NTSC colour system.

Note on BALANCE:
Balance control can only be used when Digital Surround is in "OFF" or "Simulated" modes. The level of left and right speaker volume is set using the Dolby Pro Logic set up menu (see page 46).

When watching a video input source with stereo sound:
You can select DUAL SOUND to change the sound.

When watching a programme in dual sound mode:
Digital Surround Mode becomes OFF automatically.

Adjusting the Picture and Sound

Although the picture and sound are adjusted at the factory, you can adjust them to suit your own taste. In addition, you can change the aspect ratio of the TV display for wide screen effect. You can also select dual sound (bilingual) programmes when available or adjust the sound for listening with the headphones (∩) or individually adjust and store the volume level of each channel (Volume offset). Also you have the possibility to adjust the sound to your individual taste using the Graphic Equalizer and special Sound effects.

1 Press ● (for picture) or ♪ (for sound) on the Remote Commander.

or

Press MENU and select `Picture Control` or `Sound Control`, then press OK.
The `PICTURE CONTROL` or `SOUND CONTROL` menu appears. (See Fig. 30 or Fig. 31)

2 Using △+ or ▽−, select the item you want to adjust and press OK.The selected item changes colour. (See Fig. 32)

3 Adjust the setting with △+ or ▽ − and press OK.
The cursor appears beside the next item (at the left margin). (See Fig. 33)
For the effect of each control, see the table below.

4 Repeat steps 2 and 3 to adjust other items.

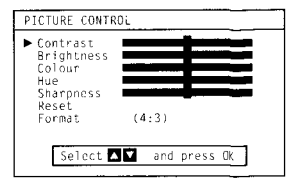

Fig. 30.

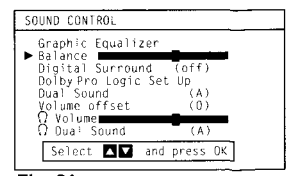

Fig. 31.

Fig. 32.

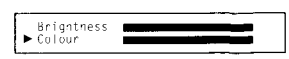

Fig. 33.

Effect of each control

PICTURE CONTROL	Effect
Contrast	Less ——I—— More
Brightness	Darker ——I—— Brighter
Colour	Less ——I—— More
Hue	Greenish ——I—— Reddish
Sharpness	Softer ——I—— Sharper
Reset	Resets picture to the factory preset levels.
Format	4:3 Normal 16:9 wide screen effect

SOUND CONTROL	Effect
Graphic Equalizer	(See page 45 for more information)
Balance	More left —I— More right
[Digital] Surround	OFF: Normal ON: Choice among special sound effects: Dolby Pro Logic ➡ Hall ➡ Arena ➡ Dome ↑— OFF ⬅ Simulated (gives width to a monaural source) ↵
Dolby Pro Logic Set Up	(See page 46)
Dual Sound	A : left channel B : right channel stereo mono The selected mode of the A-CD-B indicator on the TV light up.
Volume offset	−7 Less 0 More +7
Headphones:	
∩ Volume	Less —I— More
∩ Dual Sound	A : left channel B : right channel STEREO MONO

Graphic Equalizer

Using this function you can individually adjust the sound by cutting and boosting selected frequencies. You can also select between the following modes:

Flat ➡ POP ➡ Rock ➡ Jazz ➡ Vocal ➡ User

Note: The modifications made in "USER" mode will be stored. All other settings are reset to factory-set level when you change to another mode.

1 Select `Sound Control` in the main menu, then select `Graphic Equalizer` using △+ or ▽– and press OK. The `GRAPHIC EQUALIZER` menu appears (see Fig. -34).

2 Press OK. The colour of "Mode" changes. Select the desired mode with △+ or ▽– and press OK.

3 If you want to modify a mode, select the desired bar of a frequency band using △+ or ▽– and press OK. The selected bar changes colour. Using △+ or ▽– adjust the level of frequency and press OK. In this way you can adjust all 5 graphic bars.

4 Press MENU to return to the normal TV mode.

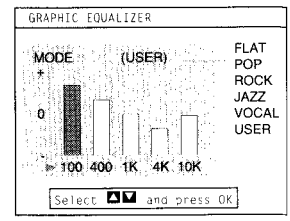

Fig -34.

PROGRAMME TABLE

Using the Programme Table

To go back to the normal TV picture:
Press MENU.

On this table, you can see which channel is preset to which programme position. You can also select programmes using this table.

1 From the main menu, select `Programme Table` with △+ or ▽– and press OK.
The `PROGRAMME TABLE` menu appears.
To scroll to higher programme numbers, press ▽–.

2 To select a programme using this menu select the programme number with △+ or ▽– and press OK.
The selected programme appears.

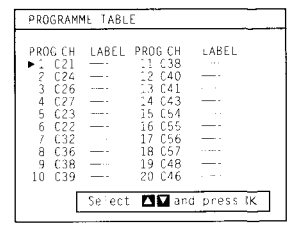

TIMER

Using the Sleep Timer

To switch off the timer:
Select "OFF" in step 3.

To check the remaining time:
Press ⊡.

You can select a time period after which the TV automatically switches into standby mode.

1 From the main menu, select `Timer` with △+ or ▽– and press OK.
The `TIMER` menu appears.

2 Press OK.
The time period option changes colour.

3 Select the time period with △+ or ▽–.
The time period (in minutes) changes as follows:
10→20→30 →40→50→60 →70→80→90
↑——————— OFF ———————┘

4 After selecting the time period, press OK.
The cursor moves back to the left margin and the timer starts counting.
One minute before the TV switches into standby mode, a message is displayed on the screen.

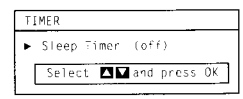

Dolby Pro Logic set up

Using this function you can experience panoramic effects of sound. Before starting, connect the enclosed centre speaker and the surround speakers. Or you can use your own speakers (at least 8Ω impedance) instead. (See page 35).

To enjoy the best sound from your TV The Dolby Pro Logic mode should be selected when the source material you are watching is Dolby Surround encoded.

1 Select Sound Control in the main menu, then select Dolby Pro Logic set up using Δ+ or ∇– and press OK.
The Dolby Pro Logic Setup menu appears. (Digital Surround is set to Dolby Pro Logic mode automatically). (Fig. 35).
The following steps 2 to 7 are necessary only when you install the TV and the speakers or change their positions. Once having adjusted the volume in each of the speakers to the same listening level, you can always obtain the best effects at the listening position.
In other cases, press ∇– and go to step 8.

2 Press OK
The cursor moves to the position of L(Left speaker volume) and a test tone outputs in the left speaker. (Fig.36)
3 Press OK if you want to adjust the volume of L, or press repeatedly Δ+ or ∇– to select C (Centre speaker). R (Right speaker). S (Surround speakers) and press OK.
The selected bar is highlighted.
4 Press Δ+ or ∇– to adjust the volume.
The highlighted bar changes its height accordingly.
5 Press OK.
The cursor moves to the next speaker.
6 Repeat steps 3 to 5 to adjust other volumes according to your taste.
7 Press ← to exit Level Setting.
8 Press ∇– to select Centre Mode.
9 Press OK to change Centre Mode.
10 Select the mode using Δ+ or ∇– and press OK.
Normal: The centre speaker is active. Normally select this mode when the centre speaker is connected.
Phantom: If you are unable to connect the centre speaker, select this mode. No sound comes from the centre channel and the left and right speakers compensate creating a "phantom" centre image.
11 Press MENU to return to the normal screen.

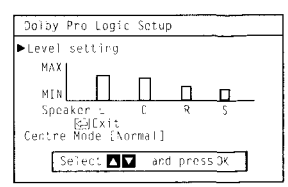

Fig. 35.

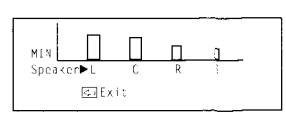

Fig. 36.

Teletext

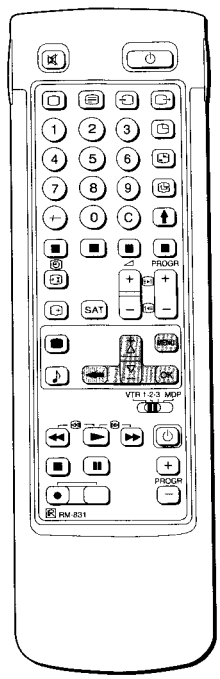

TV stations broadcast an information service called Teletext via the TV channels. Teletext service allows you to receive various information pages such as weather reports or news at any time you want. For advanced teletext operation, use the buttons on the Full-Function side of the Remote Commander.

Direct Access Functions

Switching Teletext on and off

1 Select the TV channel which carries the teletext broadcast you want to watch.

2 Press ⊜ to switch on teletext.
A teletext page will be displayed (usually the index page).If there is no teletext broadcast, "No text available" is displayed on the information line at the top of the screen.

To switch teletext off
Press ▢.

Selecting a teletext page

With direct page selection

Use the number buttons to input the three digits of the chosen page number.
If you have made a mistake, type in any three digits. Then re-enter the correct page number.

With page-catching

1 Select a teletext page with a page overview (e.g. index page).

2 Press OK. Using △+ or ▽–, select the desired page. "Page Catching" will be displayed on the information line. Press OK. The requested page will appear in a few seconds.

Press ⊜ to resume normal teletext reception.

Accessing next or preceding page

Press ⊜ (PAGE +) or ⊜ (PAGE –).
The next or preceding page appears.

Superimposing the teletext display on the TV programme

- Press ⊜ once in teletext mode or twice in TV mode.
- Press ⊜ again to resume normal teletext reception.

Preventing a teletext page from being updated

- Press ⊜ (HOLD). The HOLD symbol "⊜" is displayed on the information line.
- Press ⊜ to resume normal teletext reception.

Using Fastext

With Fastext you can access pages with one key stroke.When a Fastext page is broadcast, a colour-coded menu will appear at the bottom of the screen. The colours of this menu correspond to the red, green, yellow and blue buttons on the Remote Commander.
Press the corresponding coloured button on the Remote Commander which corresponds to the colour-coded menu. The page will be displayed after some seconds.

Note:
Teletext errors may occur if the broadcasting signals are weak.

With the simple side of the Remote Commander:
You can switch teletext on and off, operate Fastext, and directly select page numbers.

Note:
Fastext operation is only possible, if the TV station broadcasts Fastext signals.

Using the Teletext Menu

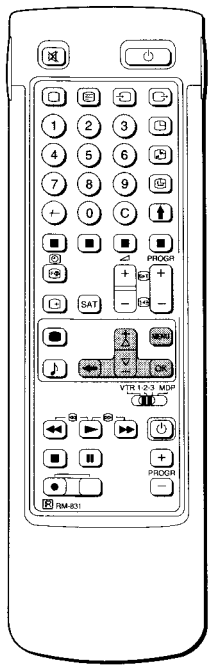

Note:
Some of the features may not be available depending on the Teletext service.

Note on Subtitles:
If the subtitles are not broadcast on page 888, please select the subtitle page using the number buttons.

To cancel the request:
Select "OFF" for the TIME PAGE setting.

This TV is provided with a menu-guided teletext system. When teletext is switched on, you can use the menu buttons to operate the teletext menu. Select the teletext menu functions in the following way:

1 Press MENU. The menu will be superimposed on the teletext display. (See Fig. 37)

2 Using △+ or ▽–, select the teletext function you want and press OK. (See Fig. 38)

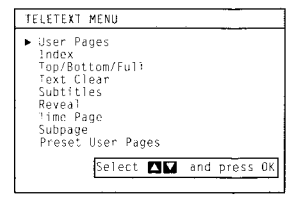

Fig. 37.

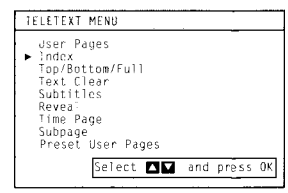

Fig. 38.

USER PAGES/PRESET USER PAGES

See page 49 for information about presetting and operating the user pages.

INDEX

The index will give you an overview of the contents of the teletext and the page numbers.

TOP/BOTTOM/FULL

For convenient reading of a teletext page, you can enlarge the teletext display with the ability to scroll up and down the screen. After having selected the function, an information line `Top/Bottom/Full` will be displayed. (See Fig. 39)

Press △+ for `Top` to enlarge the upper half. For `Bottom` keep pressing ▽–, to enlarge the lower half. Press OK for `Full` to resume the normal size.

Press ⓣ to resume normal teletext reception.

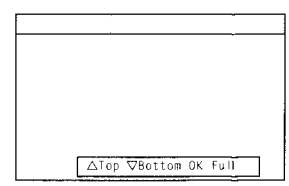

Fig. 39.

TEXT CLEAR

After having selected the function, you can watch a TV programme while waiting for a requested teletext page to be captured (The symbol changes colour) (see Fig. 40).

Press ⓣ to view the requested page.

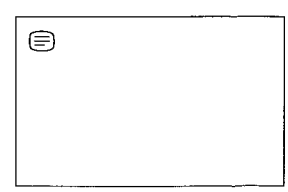

Fig. 40.

SUBTITLES

Your teletext service will inform you if a TV programme is subtitled. After having selected the function the subtitles will be displayed.

REVEAL

Sometimes pages contain concealed information, such as answers to a quiz. The reveal option lets you disclose the information. After having selected the function, an information line "REVEAL ON/OFF" will be displayed. (See Fig. 41)

Using △+ or ▽–, select ON to reveal the information or OFF to conceal it again.

Press ⓣ to resume normal teletext reception.

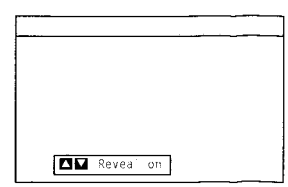

Fig. 41.

TIME PAGE

Your teletext service will inform you, if a time coded page is available. You may have a page (e.g. an alarm page) displayed at a certain time.

1 Press OK, using △+ or ▽–, select ON and press OK.

2 To select the desired page, enter the three digits of the page number using the number buttons.

3 To select the desired time, enter four digits for the desired time (e.g. 1800) using the number buttons. Press MENU. The selected time is displayed at the top in the left-handed corner. At the requested time, the page will be displayed.

To cancel the request:
Select "Subpage" and press OK.

SUBPAGE

You may want to select a particular teletext page from several subpages which are rotated automatically. After having selected the function, an information line will be displayed.

To select the desired subpage, enter four digits using PROGR+/– or the number buttons. (e.g. enter 0002 for the second page of a sequence).

If two broadcasting stations use the same Teletext:
You can preset one bank to 2 different programme positions.

User Page Bank System

You can store up to 30 pages in the "Teletext page bank system". In this way you have quick access to the pages you watch frequently.

Storing pages

There are 5 "banks" (A to E) for 5 teletext stations. In each bank you can store 6 preferred pages (P1 to P6).

1 Press ⓣ (if Teletext is not on already) and MENU to show the TELETEXT MENU display.

2 Select PRESET USER PAGES with △+ or ▽– and press OK.

3 Select the desired bank with △+ or ▽– and press OK. The cursor will go to the first position (P1) of the preferred pages.

4 Input the three digits of your first preferred page with the number buttons and press OK.
The cursor will go to the second position.

5 Repeat step 4 for the other 5 page numbers you want to preset. If you do not want to preset all 6 page numbers available, press OK without inserting any number. After having finished the presetting press OK repeatedly until the cursor appears besides the next bank at the left margin.

6 Select Allocate Bank with △+ or ▽– and press OK.

7 Select the programme position for which you have preset pages with △+ or ▽– and press OK. (See Fig. 42)

8 Select the desired bank with △+ or ▽– (Banks A to E are available) and press OK.

9 Repeat steps 3 to 8 for the other 4 banks available.

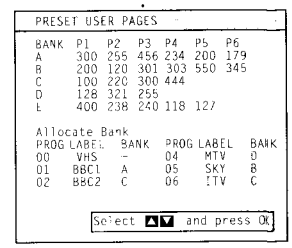

Fig.42.

Displaying User Pages

1 Select MENU.

2 Select User Pages with △+ or ▽– and press OK.
A table of the stored preferred pages will be displayed.
(See Fig. 43)

3 Select the desired page with △+ or ▽– and press OK. The page will be displayed after some seconds.

You can use the coloured buttons on the Remote Commander to have quick access to the first four User pages. Page 1 corresponds to the red button, P 2 to the green one, P 3 to the yellow one and P 4 to the blue button.

To select the desired page press the respective coloured button while you are in TV mode. Now the Page number of this teletext page will appear in white at the top in the left-handed corner of the TV screen. When the page number changes colour, the page is available. Press the coloured button again to display the page.

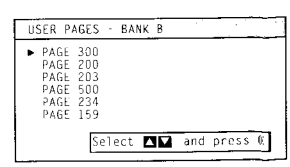

Fig. 43.

Connecting and Operating Optional Equipment

Connecting Optional Equipment

You can connect optional audio-video equipment to this TV such as VCRs, video disc players, and stereo systems.

To connect a VCR using the ⊓ terminal: Connect the aerial output of the VCR to the aerial terminal ⊓ of the TV.

We recommend that you tune in the signal to programme number "0". For details see "Preset Channels Manually" on page 37.

If the picture or the sound is distorted: Move the VCR away from the TV.

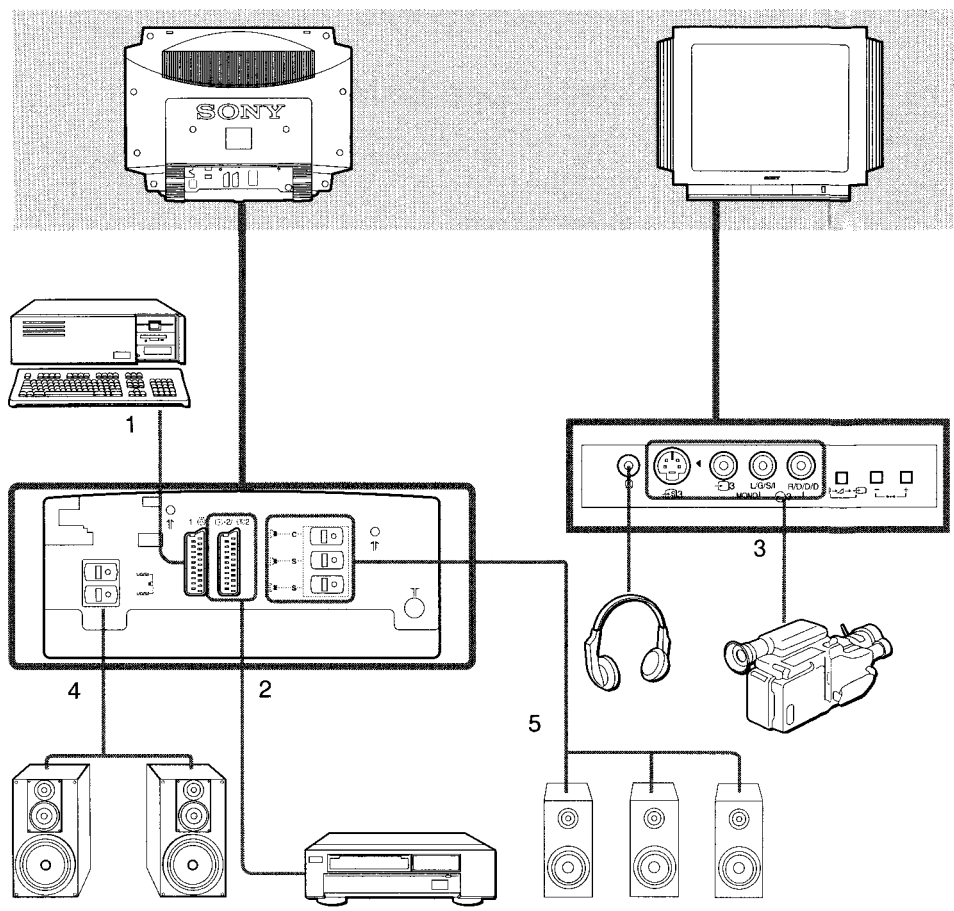

S video input (Y/C input): Video signals may be separated into Y (luminance or brightness) and C (chrominance) signals. Separating the Y and C signals prevents them from interfering with one another, and therefore improves picture quality (especially luminance). This TV is equipped with 2 S Video input jacks through which these separated signals can be input directly.

When connecting a monaural VTR: Connect only the white ⊖ jack to both the TV and VCR.

Acceptable input signal	Available output signal
1 Normal audio/video and RGB signal	Video/audio from TV tuner
2 Normal audio/video and S video signal	Video/audio from selected source
3 Normal audio/video and S video signal	No outputs
4 No inputs	Audio signal (variable)
5 No inputs	Audio signal (variable)

Selecting input and output

This section explains how to view the video input picture (of the video source connected to your TV), and how to select the output signal using direct access buttons or the menu system.

Selecting input with PROGR +/– or number buttons
You can preset video input sources to the programme positions so that you can select them with PROGR +/– or number buttons.
For details, see "Preset channels manually" on page 37.

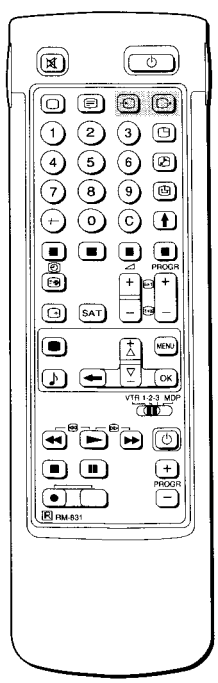

Selecting input

Press ⇦ repeatedly to select the input source.

The symbol of the selected input source will appear.

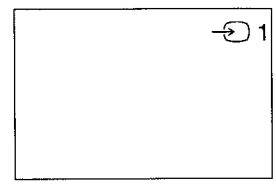

To go back to the normal TV picture

Press ▢.

Input modes

Symbol	Input signal
⇦ 1	Audio/video input through the ⇦ 1 connector
⇦	RGB input through the ⇦ 1 connector
⇦ 2	Audio/video input through the ⇨2/⇦S 2 connector
⇦S 2	S video input through the ⇨2/⇦S 2 connector
⇦ 3	Audio/video input through ⇦3 and ⇨3 on the front
⇦S 3	S video input through the ⇦S 3 connectors on the front (4-pin connector)

You can also select the input mode using the P⇢⇦ and –/+ buttons on the TV. In this case, first select ⇦, and then press –/+ buttons to select the input.

Selecting the output

The ⇨2/⇦S 2 connector outputs the source input from the other connectors.

Press ⇨ repeatedly to select the output.
The symbol of the selected output source appears.

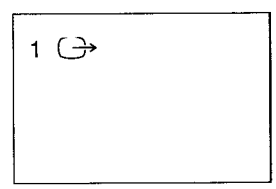

Output modes

Symbol	⇨2/⇦S 2 connector outputs
1 ⇨	The audio/video signal from the ⇦ 1 connector
2 ⇨	The audio/video signal from the ⇨2/⇦S 2 connector
2 S⇨	The audio/S video signal from the ⇨2/⇦S connector
3 ⇨	The audio/video signal from the ⇦3, ⇨3 connectors
3 S⇨	The audio/S video signal from the ⇦S 3, ⇨3 connectors
TV⇨	The audio/video signal from the ⊓ aerial terminal

Checking and selecting the input and output sources using the menu

You can display the menu to see which input sources are selected for the TV screen, and which output source is selected. You can also select them on the menu display.

1 Select Video Connection with △+ or ▽– and press OK. The VIDEO CONNECTION menu appears. (See Fig. 44)

You can see which source is selected for the TV and for the output. If you want to select the input and output on this menu, go on to the next step.

2 Select TV Screen (input source for the TV screen) or output (output source) with △+ or ▽– and press OK. One of the source items changes colour. (See Fig. 45)

3 Select the desired source with △+ or ▽–.
(See Fig. 46)
For details about each source, see the table on page 51.

4 Press OK.

The selected source is confirmed, and the cursor appears. (See Fig. 47)

5 Repeat steps 2 to 4 to select the source for other inputs or outputs.

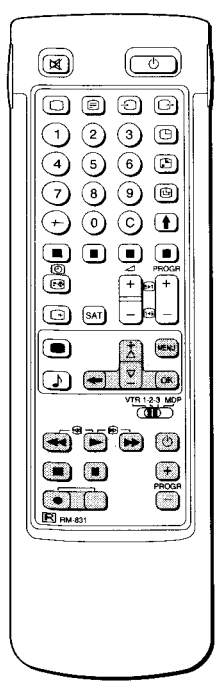

When recording
When you use the ● (record) button, make sure to press this button and the one to the right of it simultaneously.

Remote Control of Other Sony Equipment

You can use the TV Remote Commander to control most Sony remote-controlled video equipment such as: Beta, 8mm or VHS VCRs or video disc players.

Tuning the Remote Commander to the equipment

1 Set the VTR 1/2/3 MDP selector according to the equipment you want to control:

VTR 1: Beta VCR

VTR 2: 8mm VCR

VTR 3: VHS VCR

MDP: Video disc player

2 Use the buttons indicated in the illustration to operate the additional equipment.

If your video equipment is furnished with a COMMAND MODE selector: set this selector to the same position as the VTR 1/2/3 MDP selector on the TV Remote Commander.

If the equipment does not have a certain function, the corresponding button on the Remote Commander will not operate.

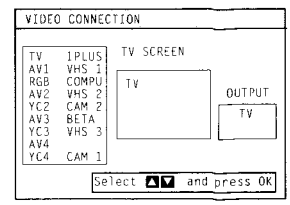

Fig. 44.

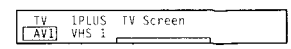

Fig. 45.

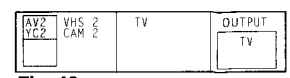

Fig. 46.

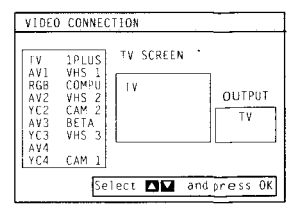

Fig. 47.

For Your Information

Troubleshooting

Here are some simple solutions to problems which may affect the picture and sound.

Problem	Solution
No picture (screen is dark), no sound	• Plug the TV in. • Press ⏻ on the TV. (If ⏻ indicator is on, press ▢ or a programme number on the Remote Commander.) • Check the aerial connection. • Check if the selected video source is on. • Turn the TV off for 3 or 4 seconds and then turn it on again using ⏻.
Poor or no picture (screen is dark), but good sound	• Press ● to enter the PICTURE CONTROL menu and adjust BRIGHTNESS, CONTRAST and COLOUR.
Poor picture quality when watching an RGB video source	• Press ⊖ repeatedly to select ⊖.
Good picture but no sound	• Press ◿ +. • If 🔇 is displayed on the screen, press 🔇.
No colour for colour programmes	• Press ● to enter the PICTURE CONTROL menu, select RESET, then press OK.
Remote Commander does not function.	• Replace battery.

If you continue to have problems, have your TV serviced by qualified personnel. Never open the casing yourself.

SECTION 2
DISASSEMBLY

2-1. REAR COVER REMOVAL

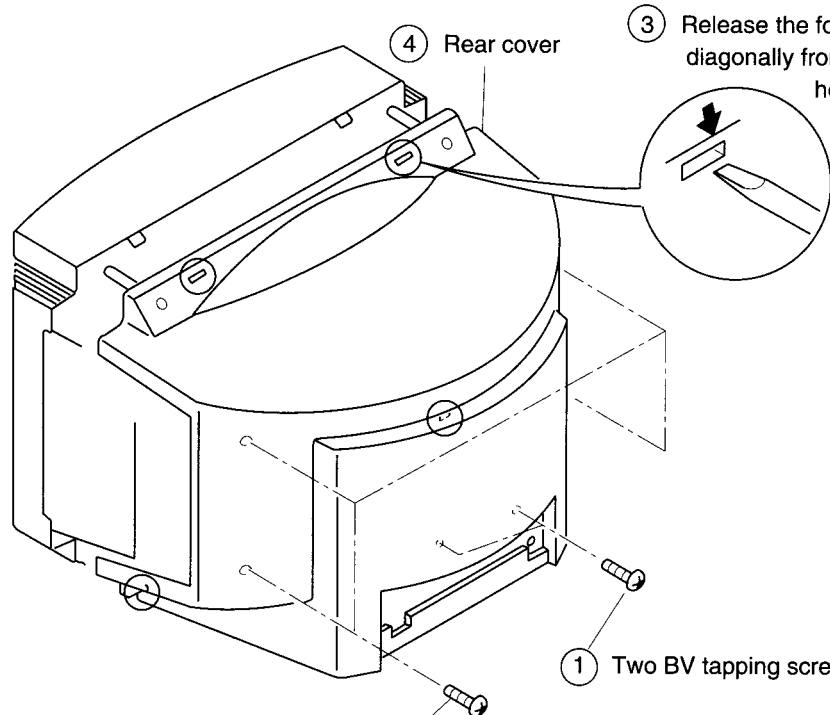

2-2. CHASSIS ASSY REMOVAL

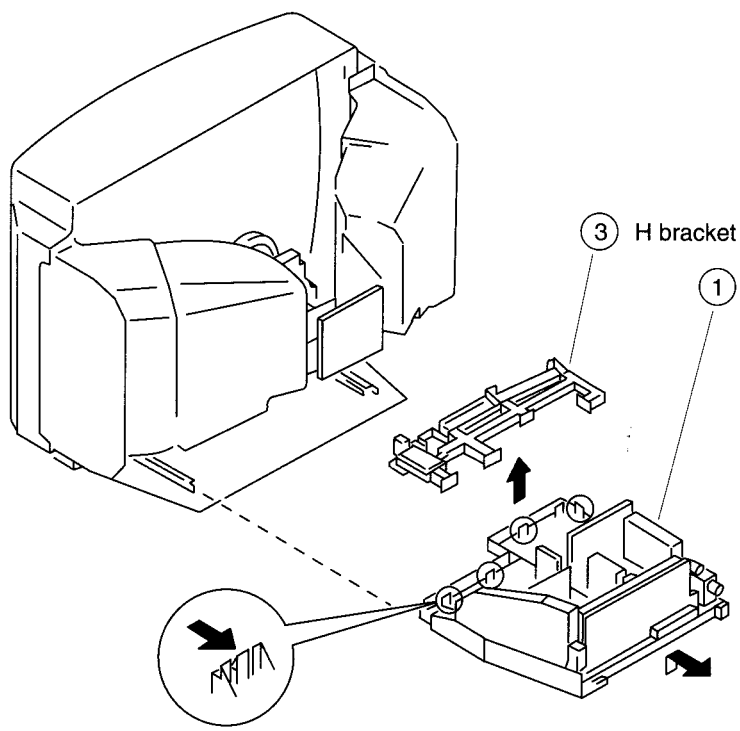

2-3. SERVICE POSITION

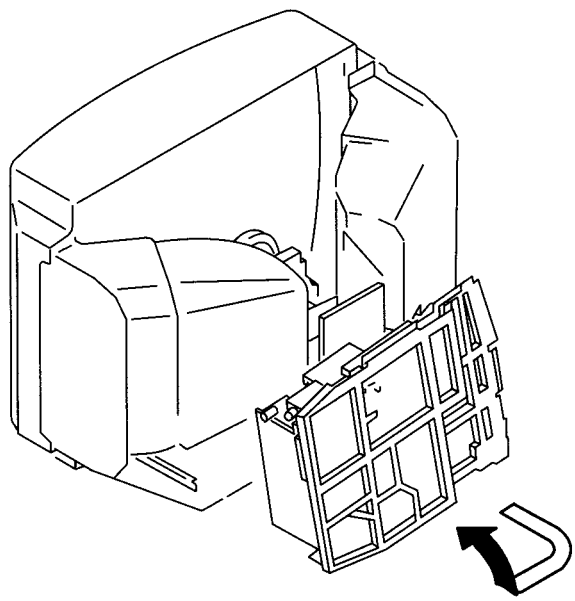

2-4. EXTENSION BOARDS

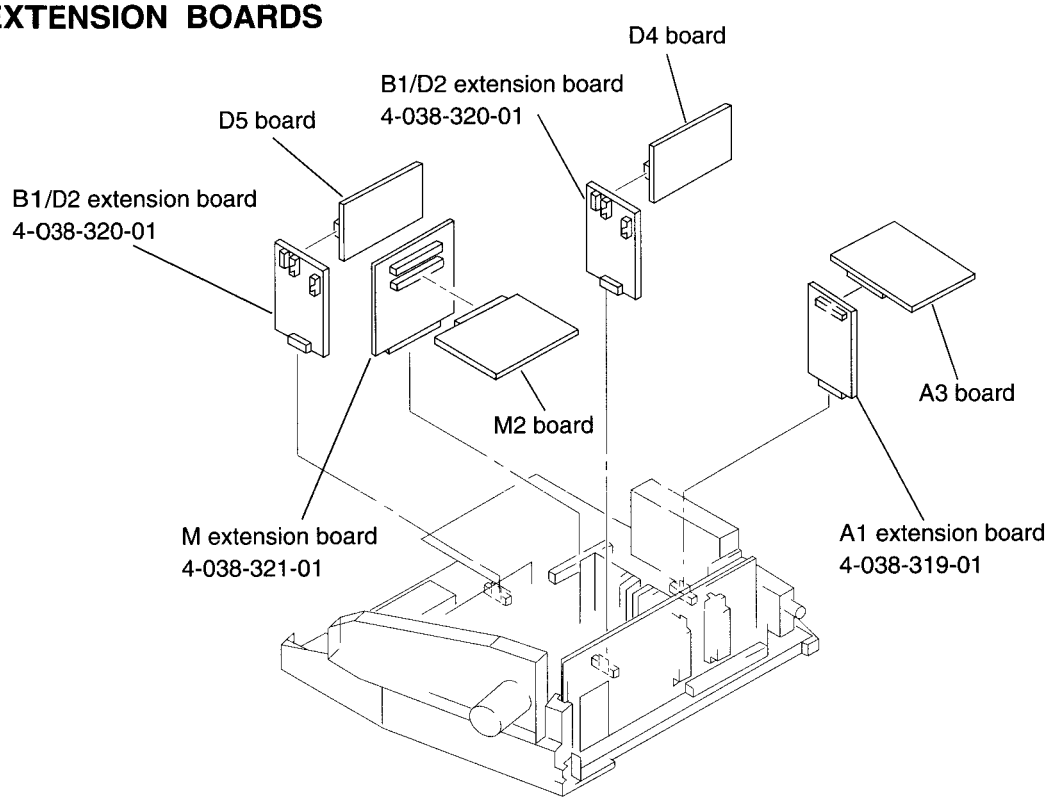

2-5. M2 AND A3 BOARD REMOVAL

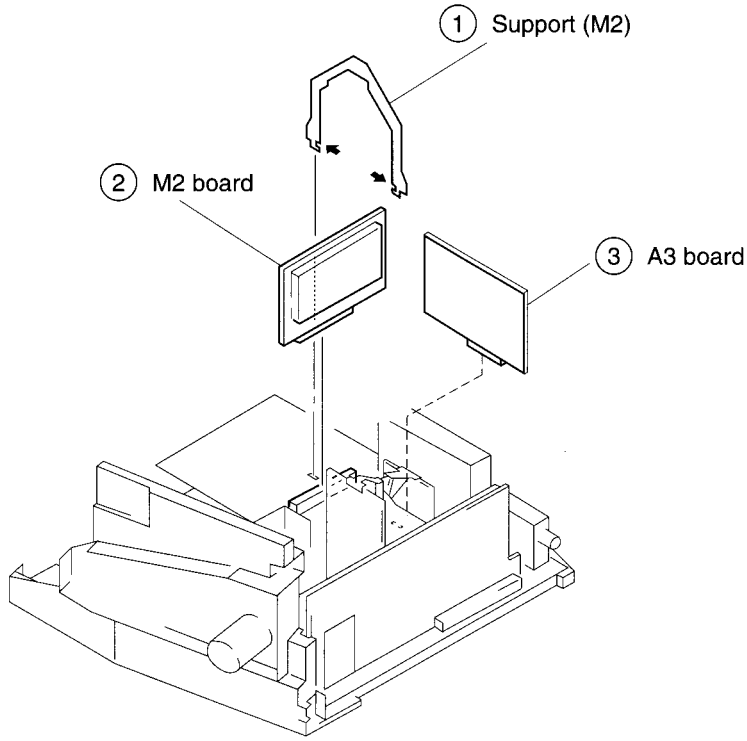

2-6. D4 AND D5 BOARD REMOVAL

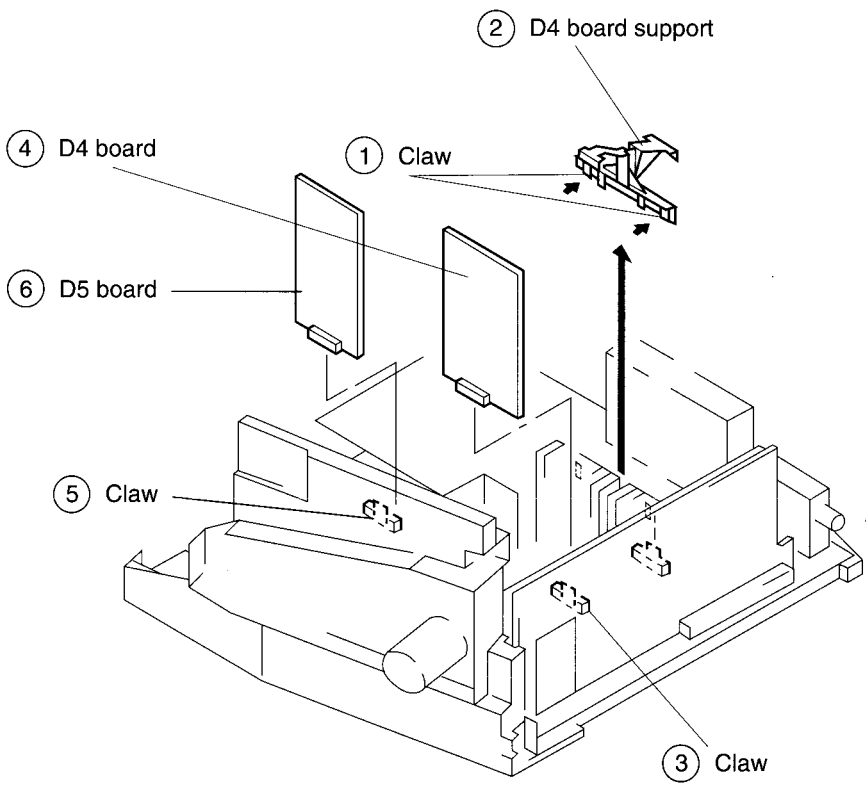

2-7. J AND K1 BOARD REMOVAL

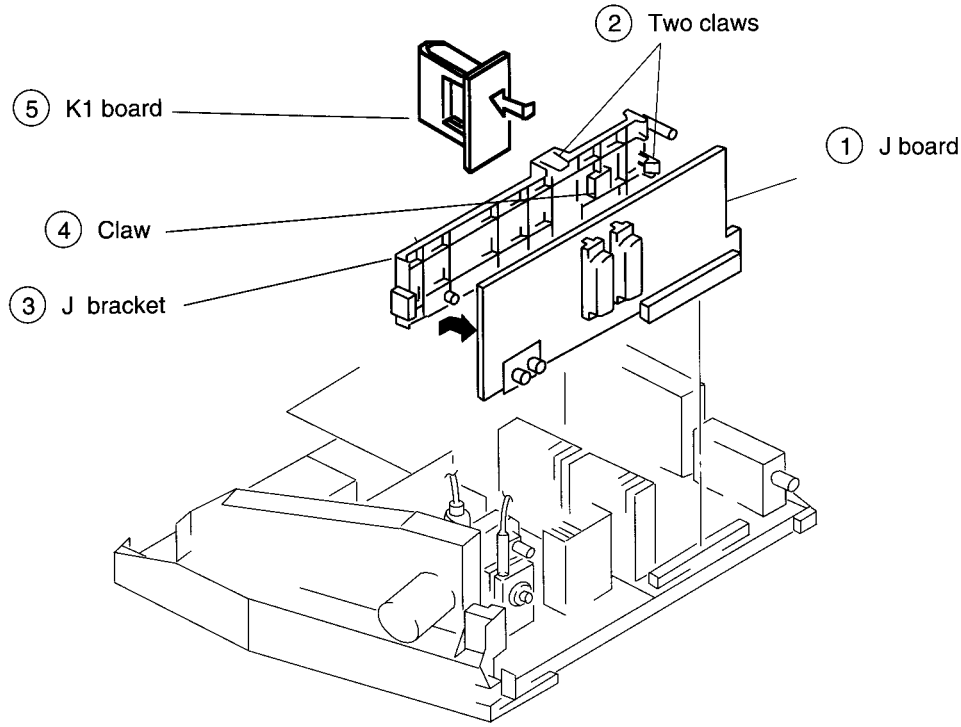

2-8. F BRACKET REMOVAL

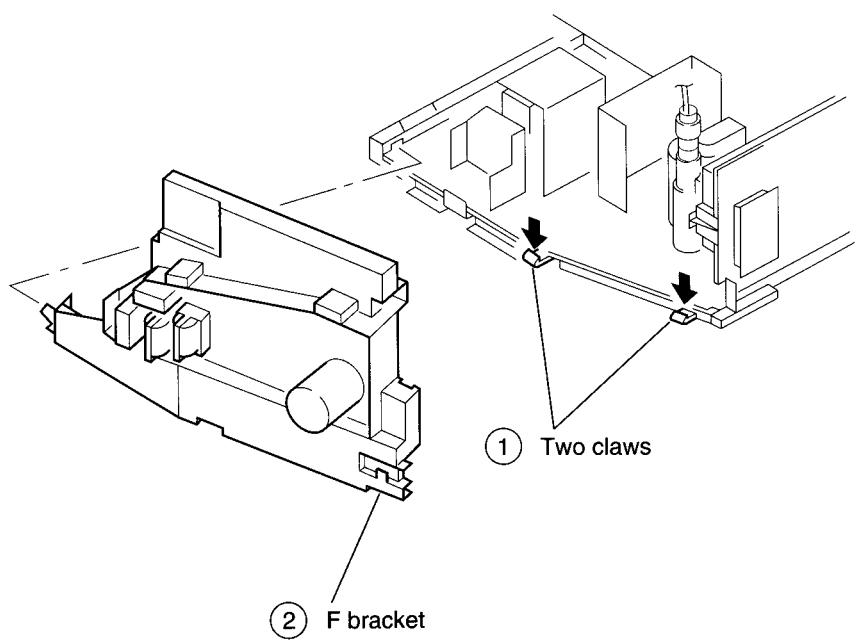

2-9-1. WIRE DRESSING

* Keep distance between (1) and (2)

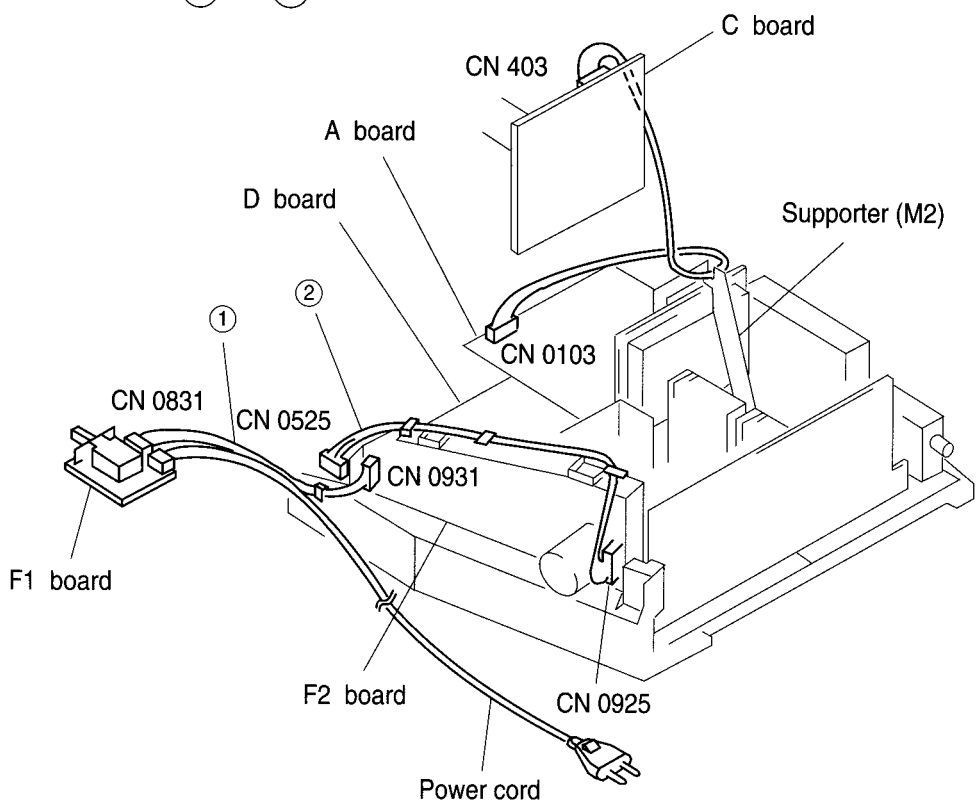

2-9-2. WIRE DRESSING

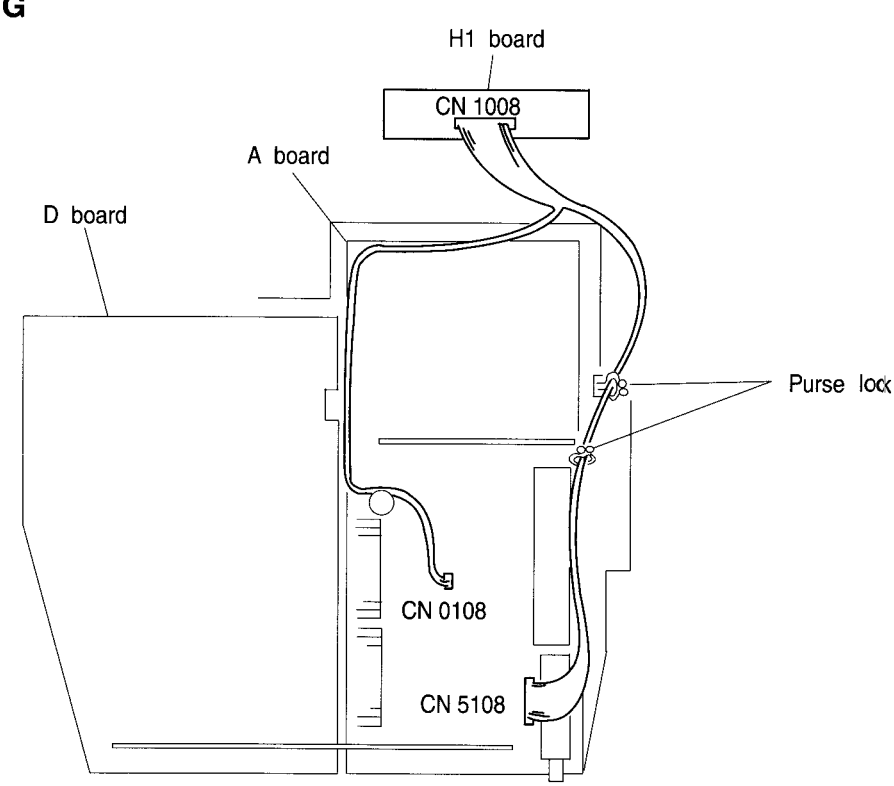

2-10. PICTURE TUBE REMOVAL

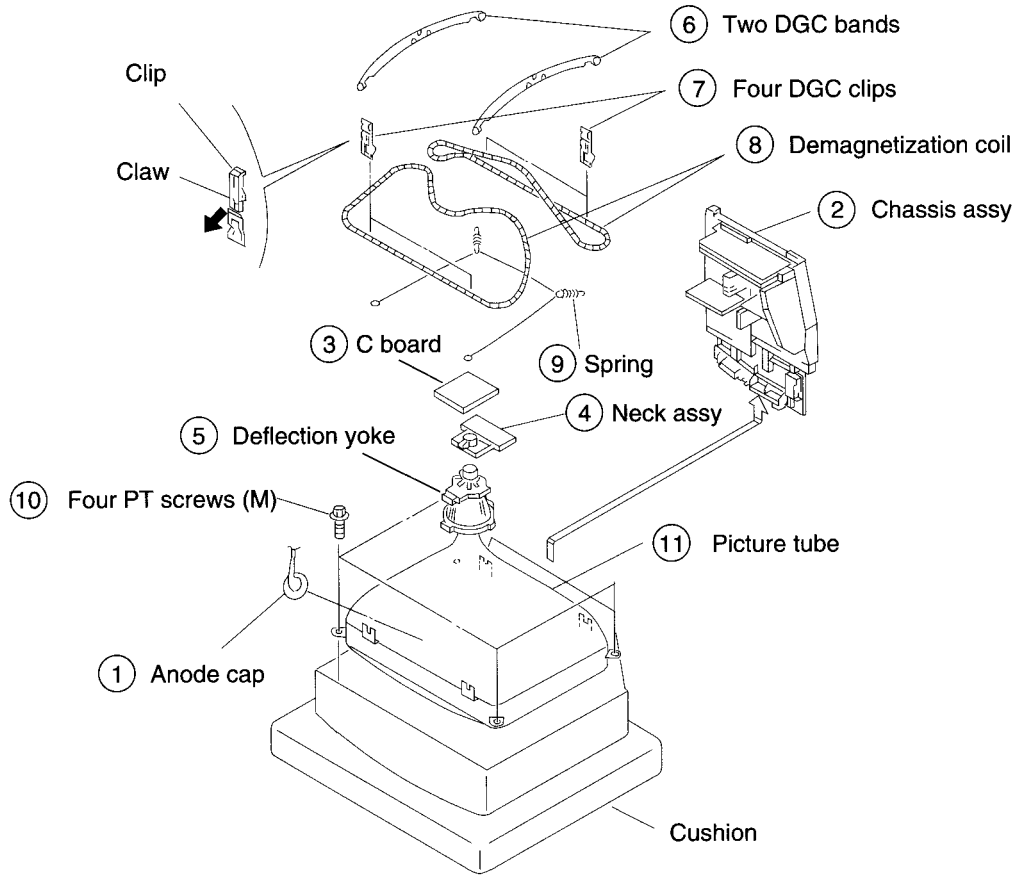

• REMOVAL OF ANODE-CAP

Note: Short circuit the anode of the picture tube and the anode cap to the metal chassis, CRT shield or carbon paint on the CRT, after removing the anode.

*** REMOVING PROCEDURES.**

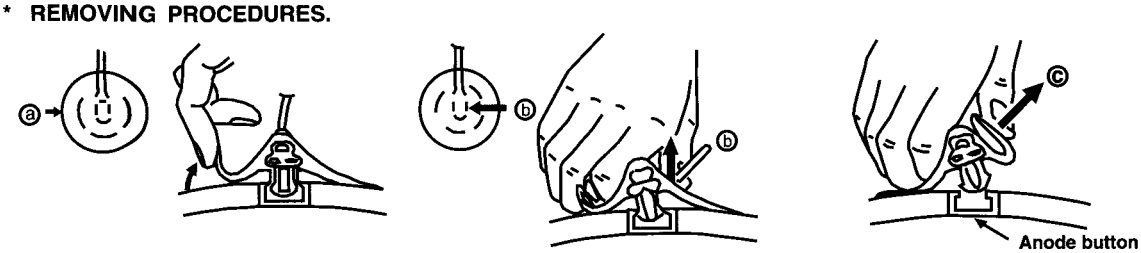

① Turn up one side of the rubber cap in the direction indicated by the arrow ⓐ

② Using a thumb pull up the rubber cap firmly in the direction indicated by the arrow ⓑ

③ When one side of the rubber cap is separated from the anode button, the anode-cap can be removed by turning up the rubber cap and pulling it up in the direction of the arrow ⓒ

• HOW TO HANDLE AN ANODE-CAP

① Don't damage the surface of anode-cap with sharp shaped material !

② Don't press the rubber hardly not to hurt inside of anode-caps !
A metal fitting called as shatter-hook terminal is built into the rubber.

③ Don't turn the foot of rubber over hardly !
The shatter-hook terminal will stick out or damage the rubber.

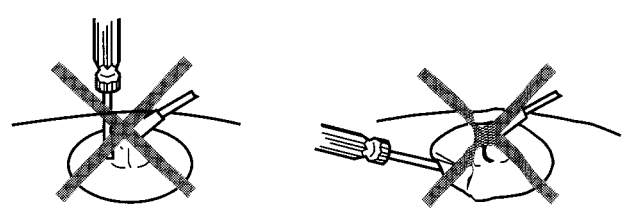

SECTION 3
SET-UP ADJUSTMENTS

- When complete readjustment is necessary or a new picture tube is installed, carry out the following adjustments.
- Unless there is specific instruction to the contrary, carry out these adjustments with the rated power supply.
- Unless there is specific instruction to the contrary, set the controls and switches this way :

◑ Contrast ..... 80% (or remote control normal)

☼ Brightness 50%

- Carry out the following adjustments in this order :

1. Beam landing
2. Convergence
3. Focus
4. White balance

Note: Testing equipment required.

1. Color bar/pattern generator
2. Degausser
3. DC power supply
4. Digital multimeter
5. Oscilloscope

Preparations :

- In order to reduce the influence of geomagnetism on the set's picture tube face it east or west.
- Switch on the set's power and degauss with the degausser.

3-1. BEAM LANDING

1. Input the white signal with the pattern generator.
   Contrast, Brightness } normal
2. Position neck assy as shown in Fig.3-2.
3. Set the pattern generator raster signal to red.
4. Move the deflection yoke to the rear and adjust with the purity control so that the red is at the center and the blue and the green take up equally sized areas on each side. (See Fig.3-1 - 3-3)
5. Move the deflection yoke forward and adjust so that entire screen is red. (See Fig.3-1)
6. Switch the raster signal to blue, then to green and verify the condition.
7. When the position of the deflection yoke has been decided, fasten the deflection yoke with the screws.
8. If the beam does not land correctly in all the corners, use a magnet to adjust it. (See Fig.3-4)

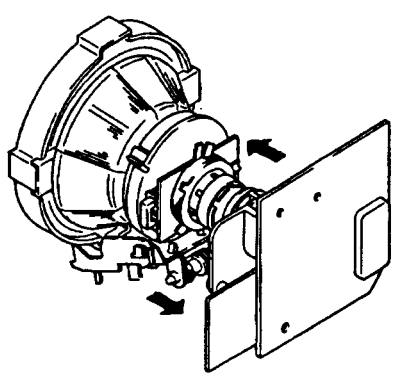

Fig.3-1

Fig.3-2

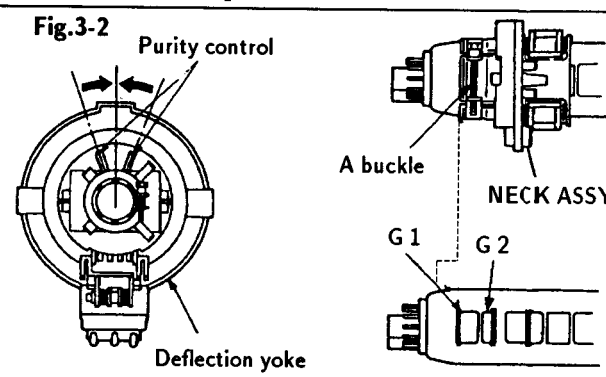

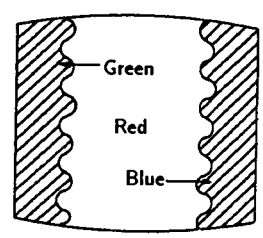

Fig.3-3

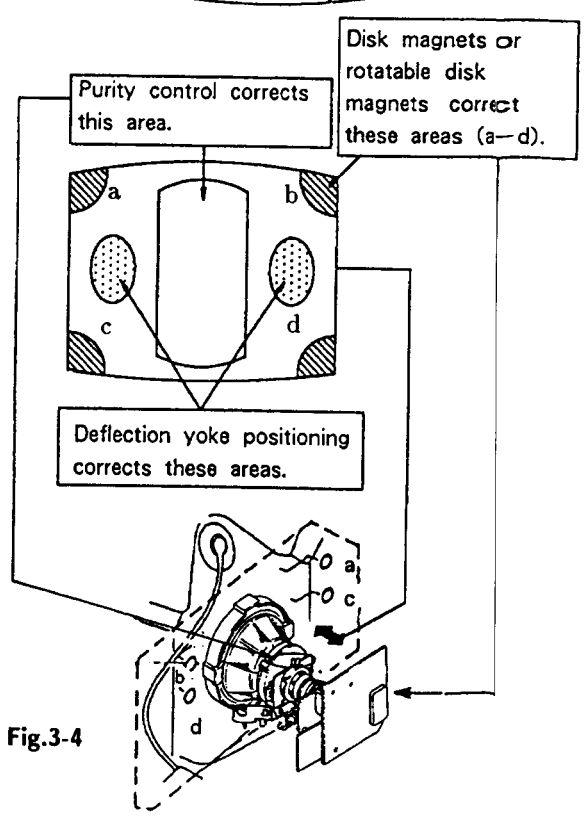

Fig.3-4

3-2. CONVERGENCE

Preparations:

- Before starting this adjustment, adjust the focus, horizontal size, and vertical size.
- Minimize the brightness setting.
- Provide dot pattern.

(1) Horizontal and vertical static convergence

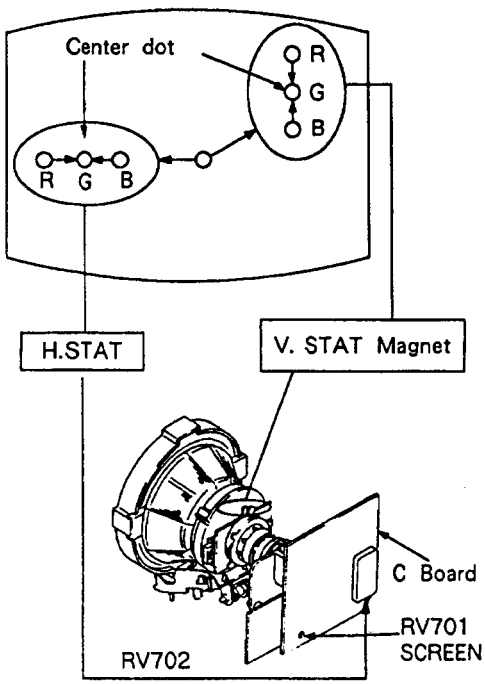

1. (Moving horizontally), adjust the H.STAT control so that the red, green, and blue points are on top of each other at the center of the screen.
2. (Moving vertically), adjust the V.STAT magnet so that the red, green, and blue points are on top of each other at the center of the screen.
3. If the H.STAT variable resistor cannot bring the red, green, and blue points together at the center of the screen, adjust the horizontal convergence with the H.STAT variable resistor and the V. STAT magnet in the manner given below.
   (In this case, the H.STAT variable resistor and the V.STAT magnet influence each other)

- Tilt the V.STAT magnet and adjust the static convergence by opening or closing the V.STAT magnet.

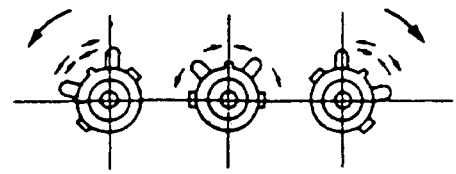

4. If the V.STAT magnet is moved in the direction of the ⓐ and ⓑ arrows, the red, green, and blue points move as shown below.

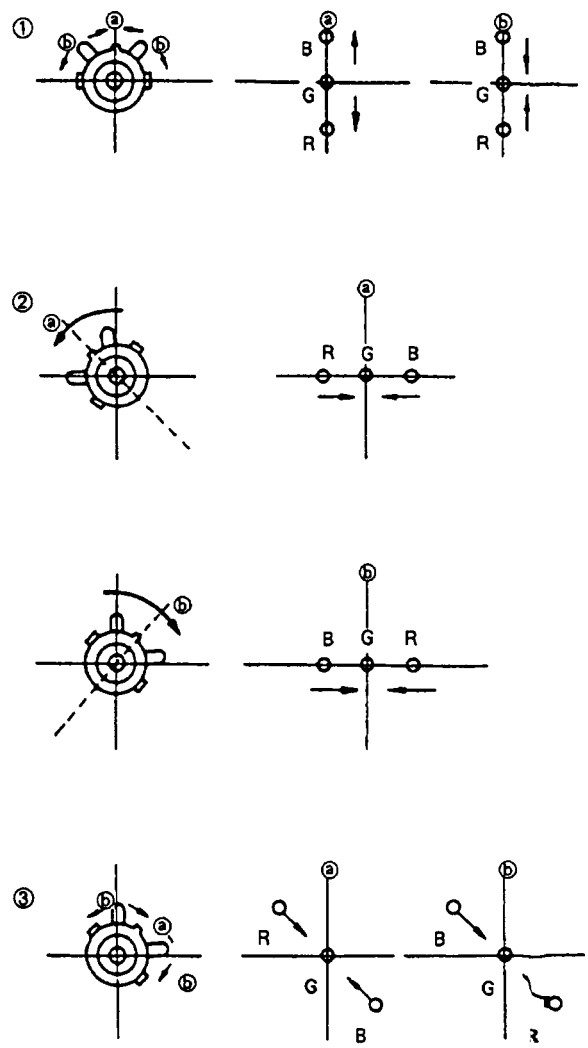

- Operation of BMC (Hexapole) Magnet

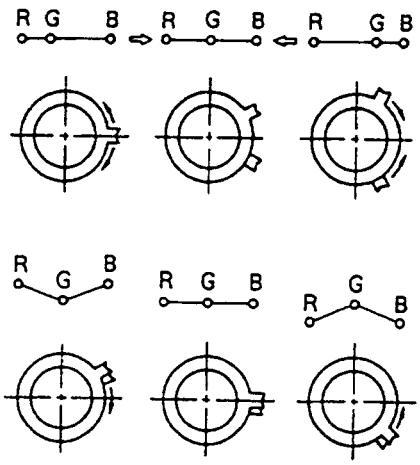

- The respective dot positions resulting from moving each magnet interact, so be sure to perform adjustment while tracking.
  Use the H.STAT VR to adjust the red, green, and blue dots so they coincide at the center of screen (by moving the dots in the horizontal direction).

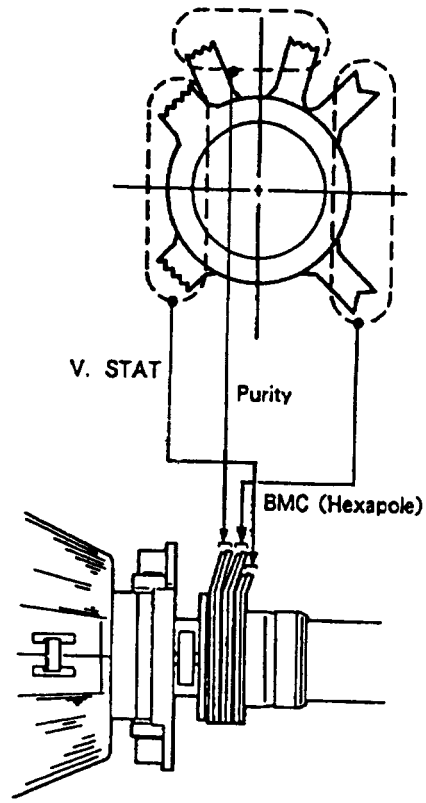

(2)Dynamic convergence adjustment

Preparations :

● Before starting this adjustment, adjust the horizontal static convergence and the vertical static convergence.

1. Slightly loosen the deflection yoke screws.
2. Remove the deflection yoke spacer.
3. Move the deflection yoke as shown in the figure below and optimize the convergence.
4. Tighten the deflection yoke screws.
5. Install the deflection yoke spacer.

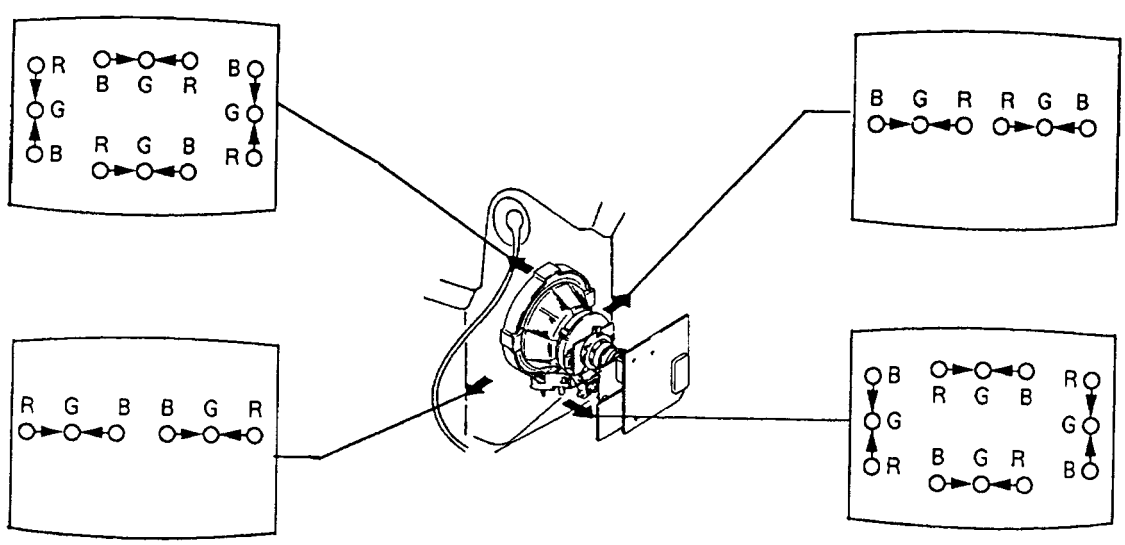

(3) Screen corner convergence

If you cannot adjust corner convergence properly, correct them with permalloy.

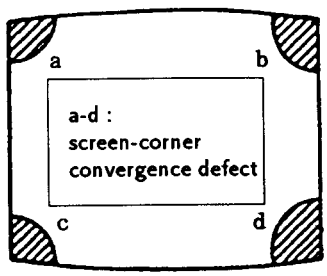

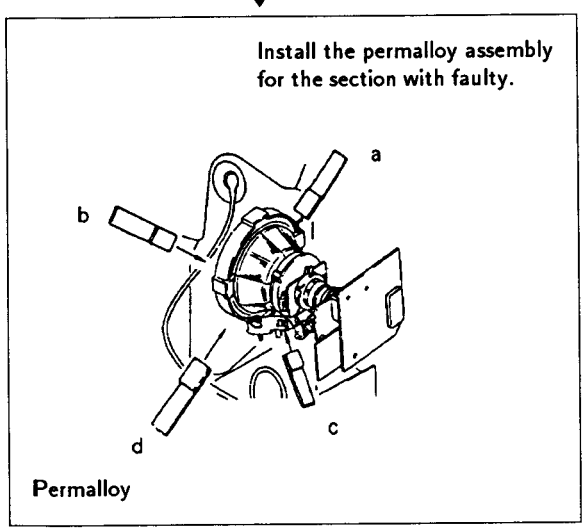

3-3. FOCUS

Adjust the focus to optimize the screen.

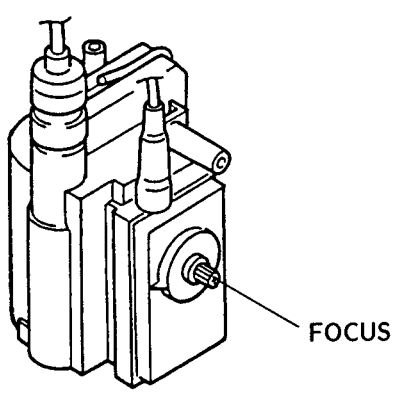

3-4. WHITE BALANCE

Screen G2 Setting

1. Input the dot signal from the pattern generator.
2. Set the picture brightness control to its lowest level.
3. Apply 180V DC to the R,G, and B cathodes with an external power supply.
4. While watching the picture, adjust G 2 control RV 701 (Screen) to the point just before the return lines disappear.

White balance adjustment

1. Receive all-white signal.
2. Enter into service mode. (Refer to the section 4 "Electrical Adjustment" to how to enter service mode.)
3. Select CXA1587S on menu.

09	SUB BRIGHT	ADJ.
10	SUB HUE	7
11	VM LEVEL	2
12	NR LEVEL	0
13	ABL MODE	0
14	G-DRIVE	ADJ.
15	B-DRIVE	ADJ.
16	G-AUTO CUT OFF	ADJ.
17	B-AUTO CUT OFF	ADJ.
18	R-MANUAL CUT OFF	ADJ.
19	G-MANUAL CUT OFF	ADJ.
20	B-MANUAL CUT OFF	ADJ.

4. Set picture to MAX.
5. Adjust G-DRIVE B-DRIVE with ↑, ↓ buttons so that the white balance becomes optimum.
6. Press OK button to write the data for each item.
7. Set picture to MIN.
8. Adjust G-AUTO CUT OFF, B-AUTO CUT OFF, R-MANUAL CUT OFF, G-MANUAL CUT OFF and B-MANUAL CUT OFF with ↑, ↓ buttons so that the white balance becomes optimum.
9. Press OK button to write the data for each item.

SECTION 4
CIRCUIT ADJUSTMENTS

4-1. ELECTRICAL ADJUSTMENTS

Service adjustment to this model can be performed with the supplied remote commander RM-831

HOW TO ENTER INTO SERVICE MODE

1. Turn on the main power switch of the set while pressing any two buttons on the front panel.

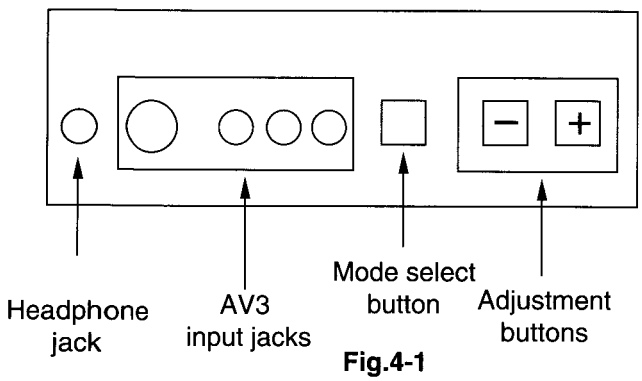

Fig.4-1

2. "TT" will appear at the upper right corner of the screen.

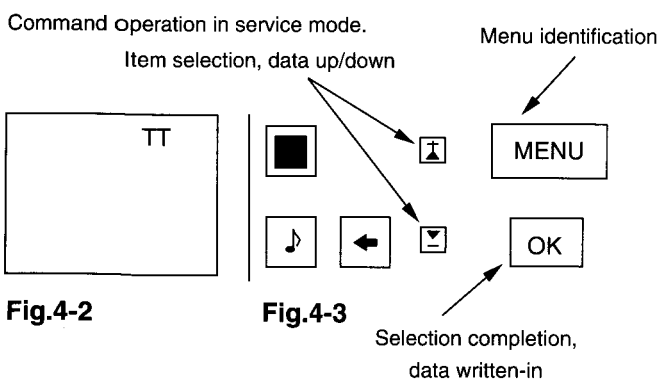

Fig.4-2 Fig.4-3

3. Press the MENU button on the remote commander to obtain the menu on the screen.

MAIN MENU
Programme Table
Video Connection
Picture Control
Sound Control
Timer
Preset
Language
> DEMO
Select < > and press OK

Fig.4-4

4. Press the ▲ and ▼ buttons on the remote commander and move > to DEMO.
5. Press [OK] button to proceed to the next menu.
6. The menu of fig. 4-5 will appear on the screen. Select the DEVICE corresponding to the adjustment item from the table on the next page.

DEVICES
Initialize
> CXA1587
CXD2018
TDA9145
CXA1526
TDA6612
CX7948A
P/P service
Select < > and press OK

Fig. 4-5

7. If adjustment item is CXA1587, press the ▼ button and move > to CXA1587.

CXA1587

	Item No	Adjustment item	Data Amount
	01	PICTURE	53
	02	COLOR	31
	03	BRIGHT	31
	04	HUE	31
	05	SHARPNESS	12
	06	RGB PICTURE	7
	07	SUB CONTRAST	ADJ.
	08	SUB COLOR	ADJ.
>	09	SUB BRIGHT	ADJ.
	10	SUB HUE	8
	11	VM LEVEL	2
	12	NR LEVEL	0
	13	ABL MODE	0
	14	G-DRIVE	ADJ.
	15	B-DRIVE	ADJ.

8. Press [OK] button to get the next selection menu.
9. Press ▼ button and move > to the adjustment item and press [OK] button.
10. Press ▲ and ▼ buttons to change the data in order to comply with each standard.
11. Press [OK] button to write data.
12. Turn off the power to quit service mode when adjustments are completed.

CXA1587

Item No	Adjustment item.	Data Amount
01	PICTURE	53
02	COLOR	31
03	BRIGHT	31
04	HUE	31
05	SHARPNESS	12
06	RGB PICTURE	7
07	SUB CONTRAST	ADJ.
08	SUB COLOR	ADJ.
09	SUB BRIGHT	ADJ.
10	SUB HUE	8
11	VM LEVEL	2
12	NR LEVEL	0
13	ABL MODE	0
14	G-DRIVE	ADJ.
15	B-DRIVE	ADJ.
16	G-AUTO CUT OFF	ADJ.
17	B-AUTO CUT OFF	ADJ.
18	R-MANUAL CUT OFF	ADJ.
19	G-MANUAL CUT OFF	ADJ.
20	B-MANUAL CUT OFF	ADJ.
21	GAMMA LEVEL	8
22	DC TRANSFER RATIO	3
23	DYNAMIC PICTURE	2
24	Y FILTER ADJ	ADJ.
25	Y DELAY TIME	15
26	Y DELAY SWITCH 1	0
27	Y DELAY SWITCH 2	1
28	SHARPNESS LIMIT	ON
29	TRAP	OFF
30	H SHIFT	36
31	DA TEST	ON
32	PRE/OVER	12
33	SUB FOCUS	2
34	SUB SHARPNESS	3
35	R MUTE	OFF
36	G MUTE	OFF
37	B MUTE	OFF
38	AGING 1 WHT	OFF
39	AGING 2 BLK	ON
40	AKB OFF	ON
41	INHIBIT RGB	ON
42	FORCED RGB	OFF
43	V/2 V	OFF
44	AXIS	PAL
45	HUE OFF	OFF
46	V EXTENSION	OFF
47	AFC 1	1
48	AFC 2	0
49	AFC	OFF
50	REF. POSITION	0

CXD2018

Item No	Adjustment item.	Data Amount
01	V SIZE	ADJ.
02	V SHIFT	ADJ.
03	S CORRECTION	ADJ.
04	V LINEARITY	ADJ.
05	H SIZE	ADJ.
06	PIN AMP	ADJ.
07	TILT	ADJ.
08	UPPER CORNER	ADJ.
09	LOWER CORNER	ADJ.
10	V BOW	ADJ.
11	ANGLE	ADJ.
12	HV COMP. V	12
13	HV COMP. H	8
14	FRAME SHIFT	OFF
15	FREE RUN 60 Hz	OFF
16	SYSTEM 60 Hz	OFF
17	ASPECT WIDE	OFF
18	DOUBLE SCAN	OFF
19	INTERLACE	ON
20	H SHIFT	26
21	N/S CORRECTION	ADJ.

Typical On Screen Display based values when receiving PAL Phillips pattern.

TDA6612	ADJ
Stereo-Separation	(31)

Should be adjusted twice, once for 4 : 3 and once for 16 : 9 mode.

Y FILTER ADJUSTMENT

1. Input a PAL RED pattern.
2. Connect an oscilloscope to pin ① of CN0403 (R OUT) on C board.
3. Enter into service mode and press 3,8.
4. Adjust data by △ or ▽ to minimize the chroma element at CN0403 pin ①.

SUB BRIGHTNESS ADJUSTMENT

1. Input a Phillips pattern.
2. Enter into service mode and press 23.
3. Adjust data so that 0-IRE of grey scale and CUT-OFF 20-IRE are only slightly visible on screen.

SUB CONTRAST ADJUSTMENT

1. Input a video that contains a small 100% area on a Black Background.
2. Enter into service mode and press 01 to have PIC max followed by 21.
3. Connect oscilloscope to pin ① of CN0403 (R OUT) and adjust data to obtain 2.5Vp-p.

SUB COLOR ADJUSTMENT

1. Input a PAL color bar signal.
2. Connect an oscilloscope to pin ③ of CN0403 (B OUT) on the C board.
3. Enter into service mode and press 22 of CXA1587, 8 SUB COLOR.
4. Adjust data so that the right sides of the waveform are set to the same level.

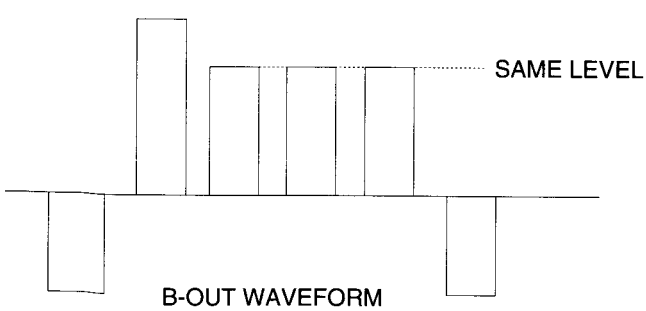

STEREO-SEPARATION ADJUSTMENT

1. Input a 1kHz stereo signal to the L-ch and a 400Hz stereo signal to the R-ch.
2. Enter into service mode and press 19.
3. Adjust data so that sound is not detected in the Right-ch and the Left-ch.

DRIVE AND CUT-OFF

See direct test mode list attached and refer to sub brightness or such for adjustment method.

DEFLECTION SYSTEM ADJUSTMENT

1. Enter into service mode and select CXD2018.
2. Select and adjust each item in order to obtain the optimum image.

CXD2018

Item No	Adjustment item.	Data Amount
01	V SIZE	ADJ.
02	V SHIFT	ADJ.
03	S CORRECTION	ADJ.
04	V LINEARITY	ADJ.
05	H SIZE	ADJ.
06	PIN AMP	ADJ.
07	TILT	ADJ.
08	UPPER CORNER	ADJ.
09	LOWER CORNER	ADJ.
10	V BOW	ADJ.
11	ANGLE	ADJ.
12	HV COMP. V	12
13	HV COMP. H	8
14	FRAME SHIFT	OFF
15	FREE RUN 60 Hz	OFF
16	SYSTEM 60 Hz	OFF
17	ASPECT WIDE	OFF
18	DOUBLE SCAN	OFF
19	NON INTERLACE	ON
20	H SHIFT	26
21	N/S CORRECTION	ADJ.

V SIZE

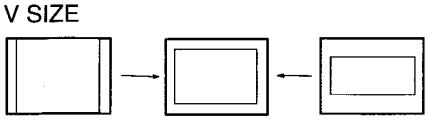

V SHIFT

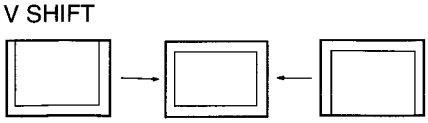

S CORRECTION

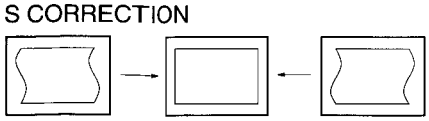

V LINEARITY

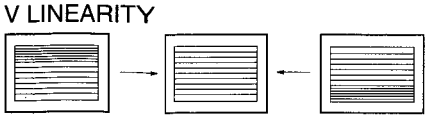

H SIZE

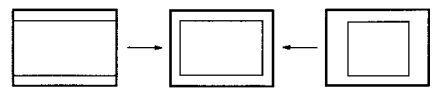

PIN AMP

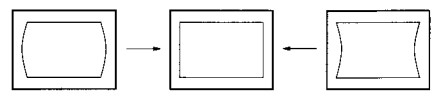

TILT

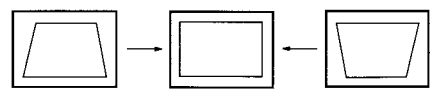

UPPER CORNER PIN

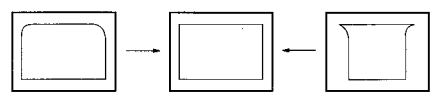

LOWER CORNER PIN

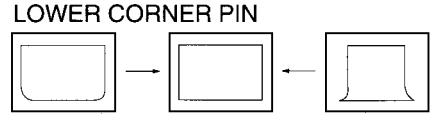

V BOW

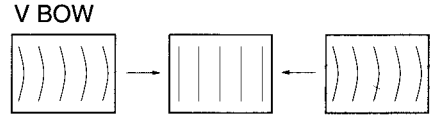

ANGLE

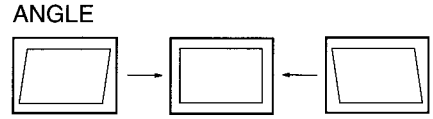

H SHIFT

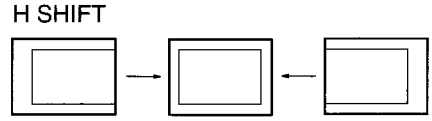

N/S CORRECTION

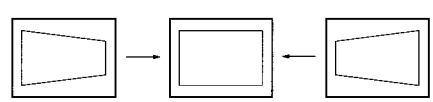

3. Press [OK] button to write data.

If the menu display prevents accurate adjustment, press ✕ to clear, to resume, press ✕ once again.

4-2. VOLUME ELECTRICAL ADJUSTMENTS

+B (+135V) ADJUSTMENT (RV601)

1. Switch on the power to the TV set.
2. Connect a digital multi-meter to pin (1) of CN0529 on D board.
3. Adjust RV601 on D board to +135V ± 0.5V.

AGC ADJUSTMENT (IF BLOCK)

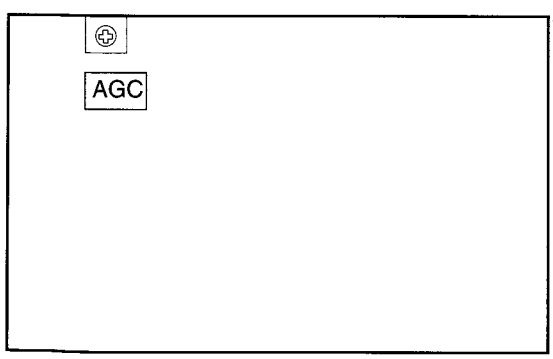

1. Receive an off-air signal.
2. Adjust the AGC VR so that there is no snow noise or cross-modulation visible on the screen.
3. Change the receiving channel and confirm status.

PULSE WIDTH & V-PIN ADJUSTMENTS (RV 1851/185

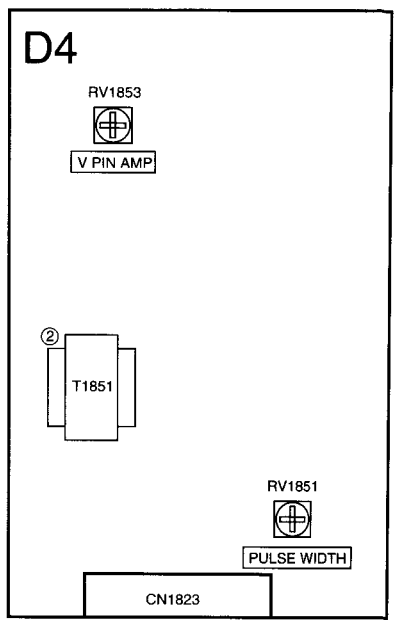

1. Connect an oscilloscope to pin (2) of T1851.
2. Preset RV-1853 to center of its range (mechanical center).
3. Adjust RV-1851 to obtain minimum amplitude.
4. Switch the oscilloscope input to D.C.and adjust RV-1853 to obtain -33.2 ± 0.5V.

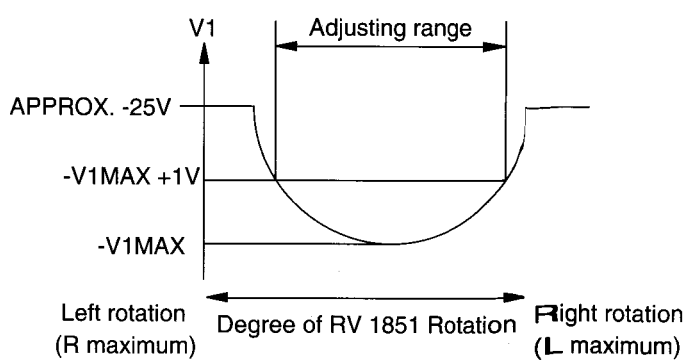

4-3. TEST MODE 2 :

Is available by pressing Test button twice, OSD 'TT' appears. The functions described below are available by pressing the two numbers. To release the Test Mode 2, press 0 twice, or switch the TV into Stand-by Mode.

00	switch Test Mode 2 off
01	picture maximum
02	picture minimum
03	Volume 35%
04	Volume 50%
05	Volume 65%
06	Volume 80%
07	Ageing Condition (Volume min., Picture max., Brightness max., Ageing 2 Mode of CXA1587, TDA2595 is locked to CXA1587 via PIN 34 of µ-Con.)
08	Shipping Condition (Analog Values are RESET due to factory setting, Prog 1 is selected, TT Mode is switched off)
09	dummy
10	Tenth entry is deleted
11	Balance
12	Hue
13	Display of Software Version and TV set configeration
14	Adjustment of N/S Correction
15	Read factory setting from NVM Reads Volume, Balance, Treble, Bass, Brightness, Contrast, Hue, Sharpness, Colour values from ROM to the actual used values (Last Power Memory)
16	Save actual used values as RESET values Memorize actual used values Balance, Treble, Bass, Hue, Sharpness at RESET position in NVM.
17	Preset Level for AV Sources
18	dummy
19	Stereo Seperation
20	Tenth entry is deleted
21	Sub Contrast
22	Sub Colour
23	Sub Brightness
24-29	dummy

30	Tenth entry is deleted
31	Green Drive
32	Blue Drive
33	Green Cut Off (Auto Cut Off)
34	Blue Cut Off (Auto Cut Off)
35	Red Cut Off (Manual Cut Off) (Auto Cut Off is switched off)
36	Green Cut Off (Manual Cut Off) (Auto Cut Off is switched off)
37	Blue Cut Off (Manual Cut Off) (Auto Cut Off is switched off)
38	Y-Filter adjustment (Trap is switched off and TDA9145 is switched in forced NTSC Mode)
39	dummy
40	Tenth entry is deleted
41	Default setting of CXA1587 (Only available in Prog 99)
42	Default setting of CXA2018 (Only available in Prog 99)
43	Default setting of CXA1526 (Only available in Prog 99)
44	(all Port High) Not yet
45	(all Port High) Not yet
46	IR Channel Pressetting Mode The channel pressetting can be done by a Special IR Transmitter
47-48	dummy
49	Erase the NVM Testbyte (this byte detects already stored NVM's) After selecting this function, switch TV Off and On -> the NVM will be preset by µ-Controller. (Not the channel data)

Note: For No 35, 36, 37 and 38 special pressing (AKB, forced Color Mode, Trap) is selected. After selecting a new Test Mode Number, the AKB is switched ON, the Trap is switched ON and TDA9145 is switched to Auto Search Mode.

In Test Mode 2 the Menu display is switchable by the Speaker-Off button.

4-4. ERROR MESSAGE

Self diagnostic system operates as follows.

- When the microprocessor is unable to receive an acknowledgement back from the device, the LED starts flashing according to the table below.

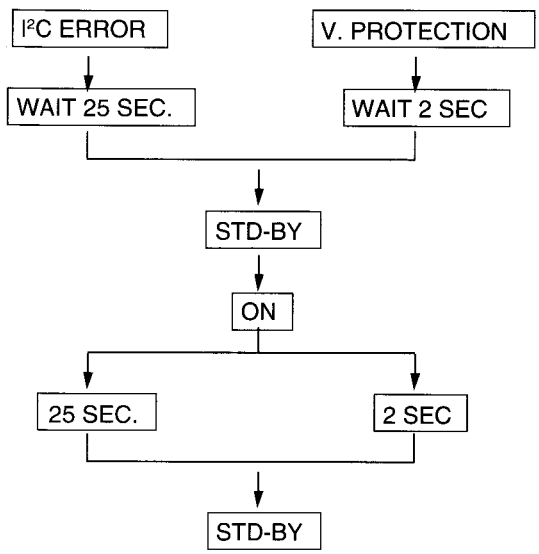

4-5. ERROR I²C BUS DIAGNOSTIC SYSTEM FOR AE2-B CHASSIS.

For all IC's used in the AE 2-B chassis which are necessary to obtain picture and sound there is an inbuilt I²C Bus diagnostic system.

In the case of no acknowledge bit, LED A and LED B start blinking as shown.

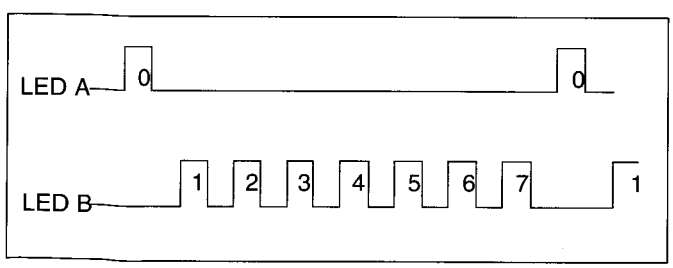

In the case of more than one error in parallel, the blinking error shows max priority according to the error number (e.g. error 2 and error 5 appear together, then LED,s show error 2).

ERROR TABLE

ERROR COUNT	IC TYPE	FUNCTION
1	II C BUS	SDA low
2	X24C16	EPROM
4	TDA9145	Colour decoder
5	CXA1587	RGB/Jungle
6	TDA6612	Sound processor
7	CXD2018	V deflection
8	CXA1545	AV switch
11	SDA5248	Text
13		V protection

Stand By LED blinking — No 1K return

SECTION 5
DIAGRAMS

5-1. BLOCK DIAGRAM (1)

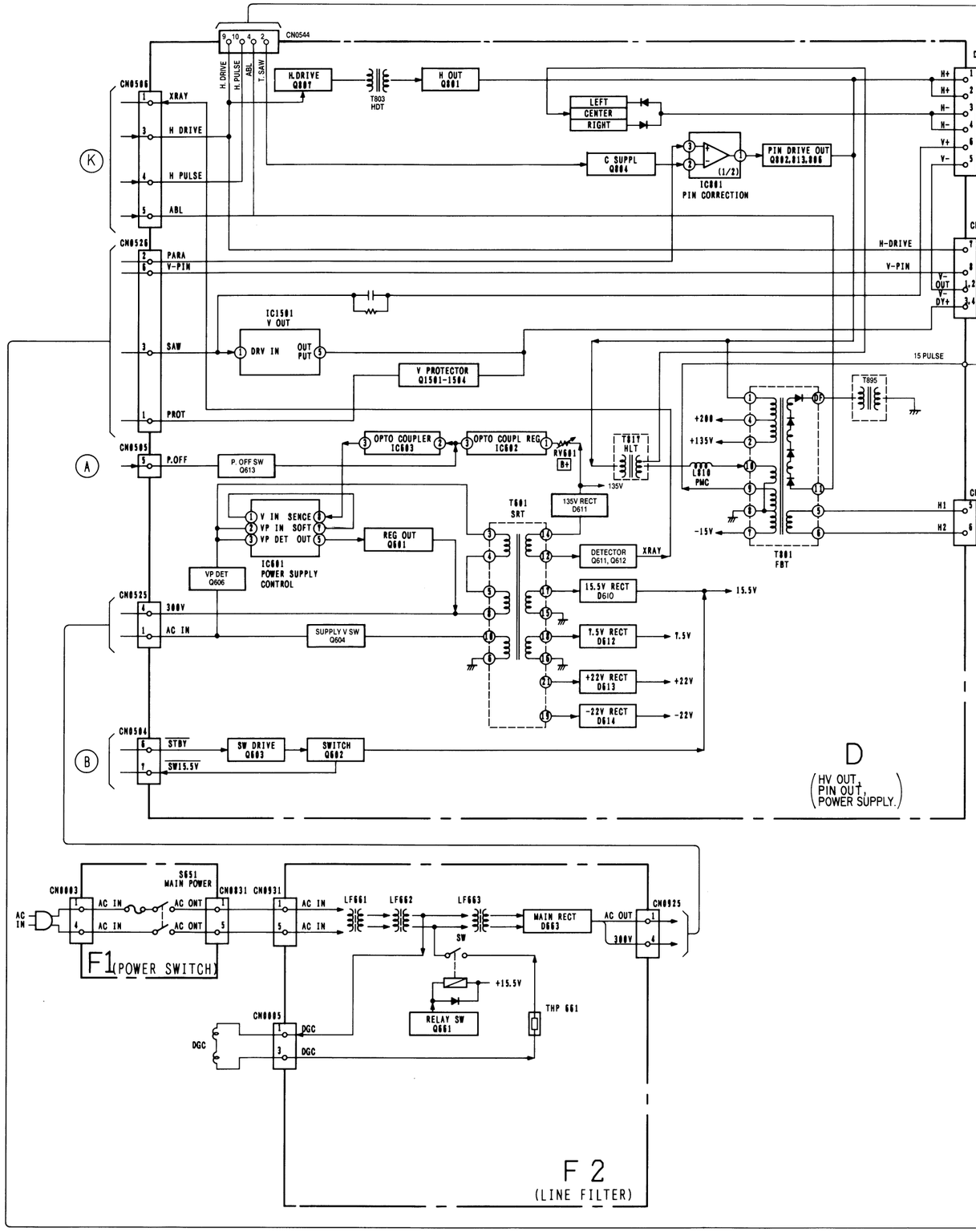

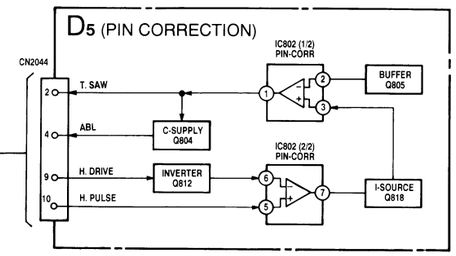

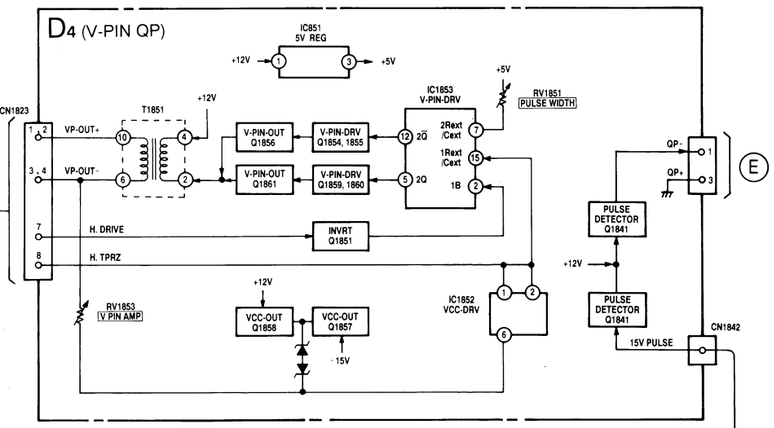

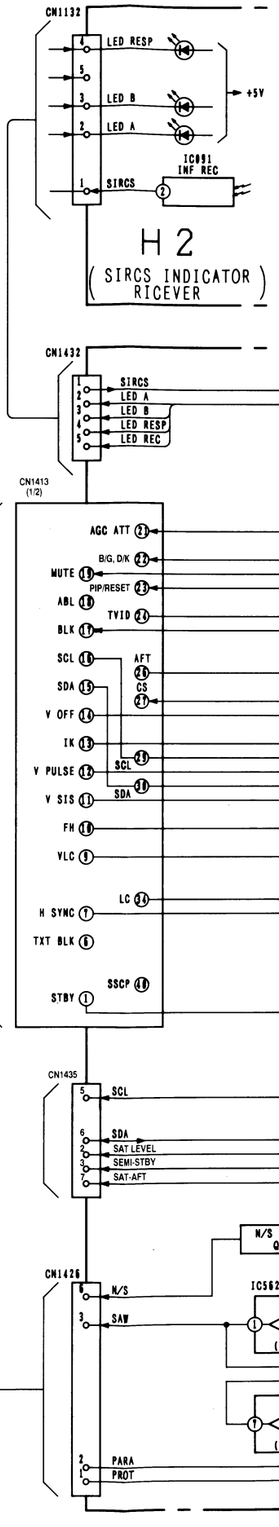

H 2
(SIRCS INDICATOR RICEVER)

M2(MICRO CONTROL, GEOMETRIE CONTROL, JUNGLE, H.DRIVE)

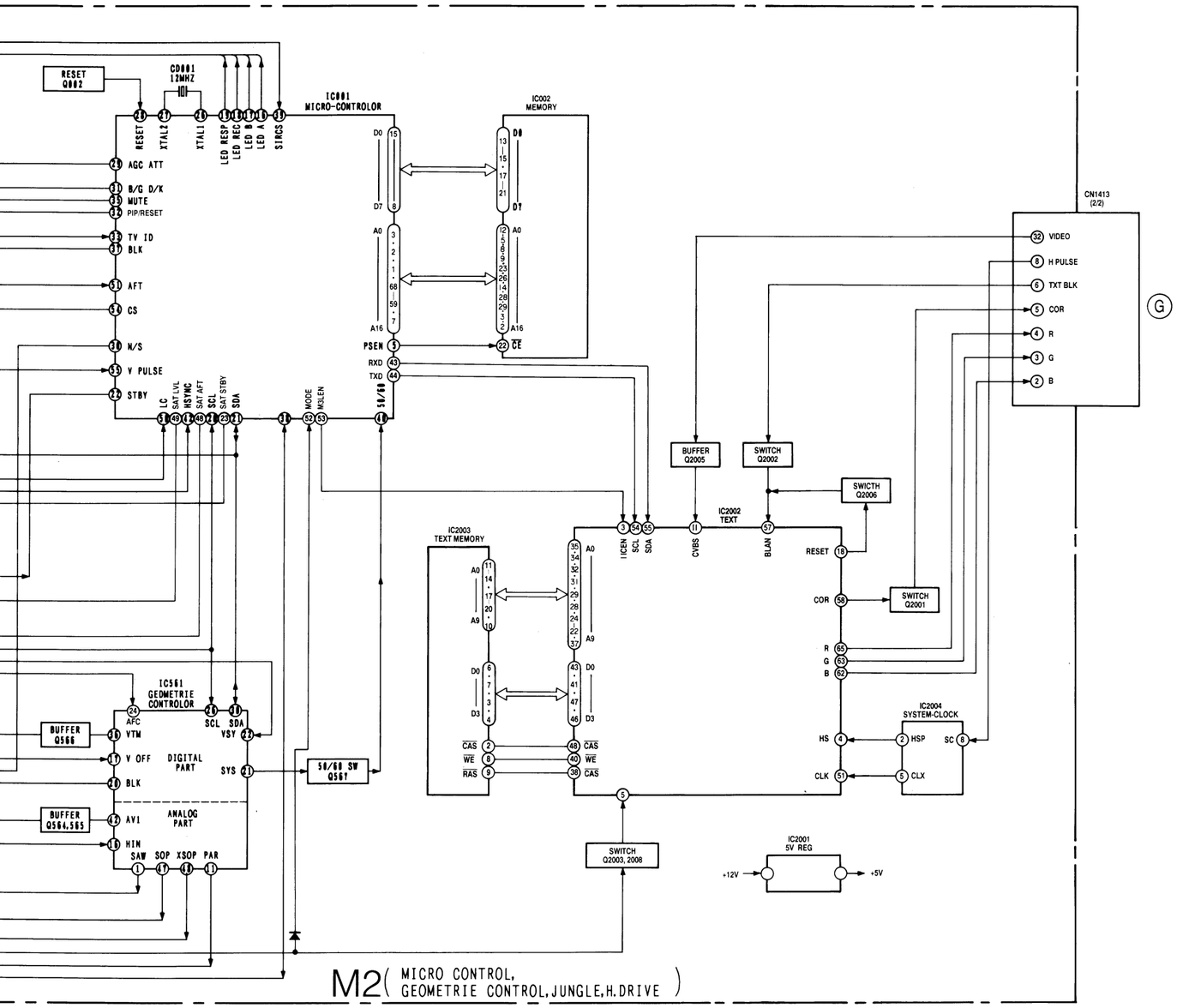

M2(MICRO CONTROL, GEOMETRIE CONTROL, JUNGLE, H.DRIVE)

KV-A294 KV-A294

BLOCK DIAGRAM (2)

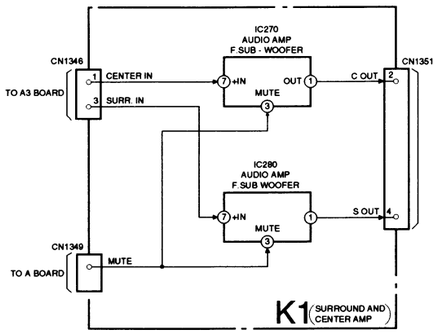

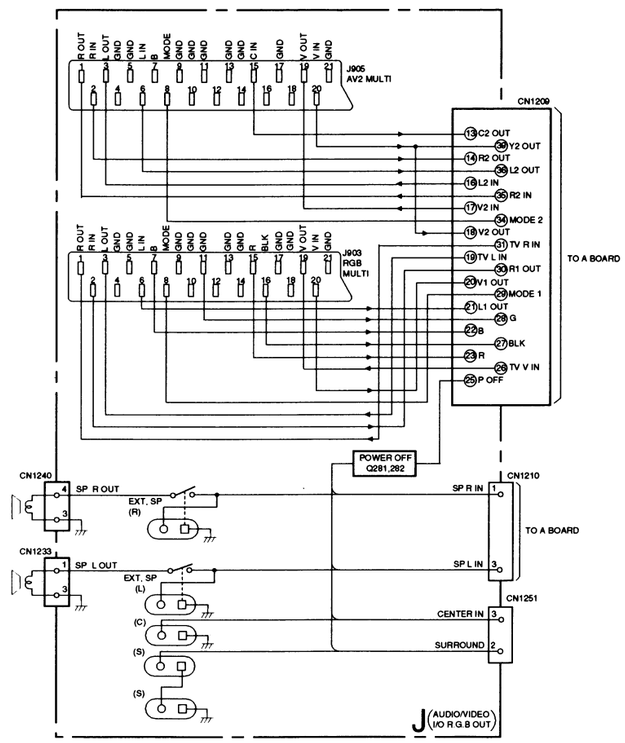

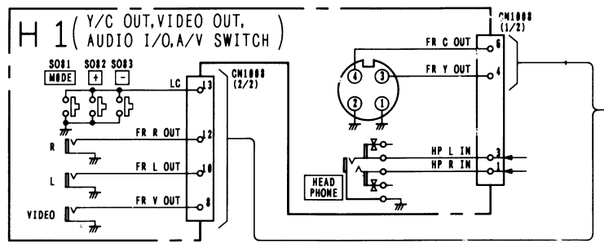

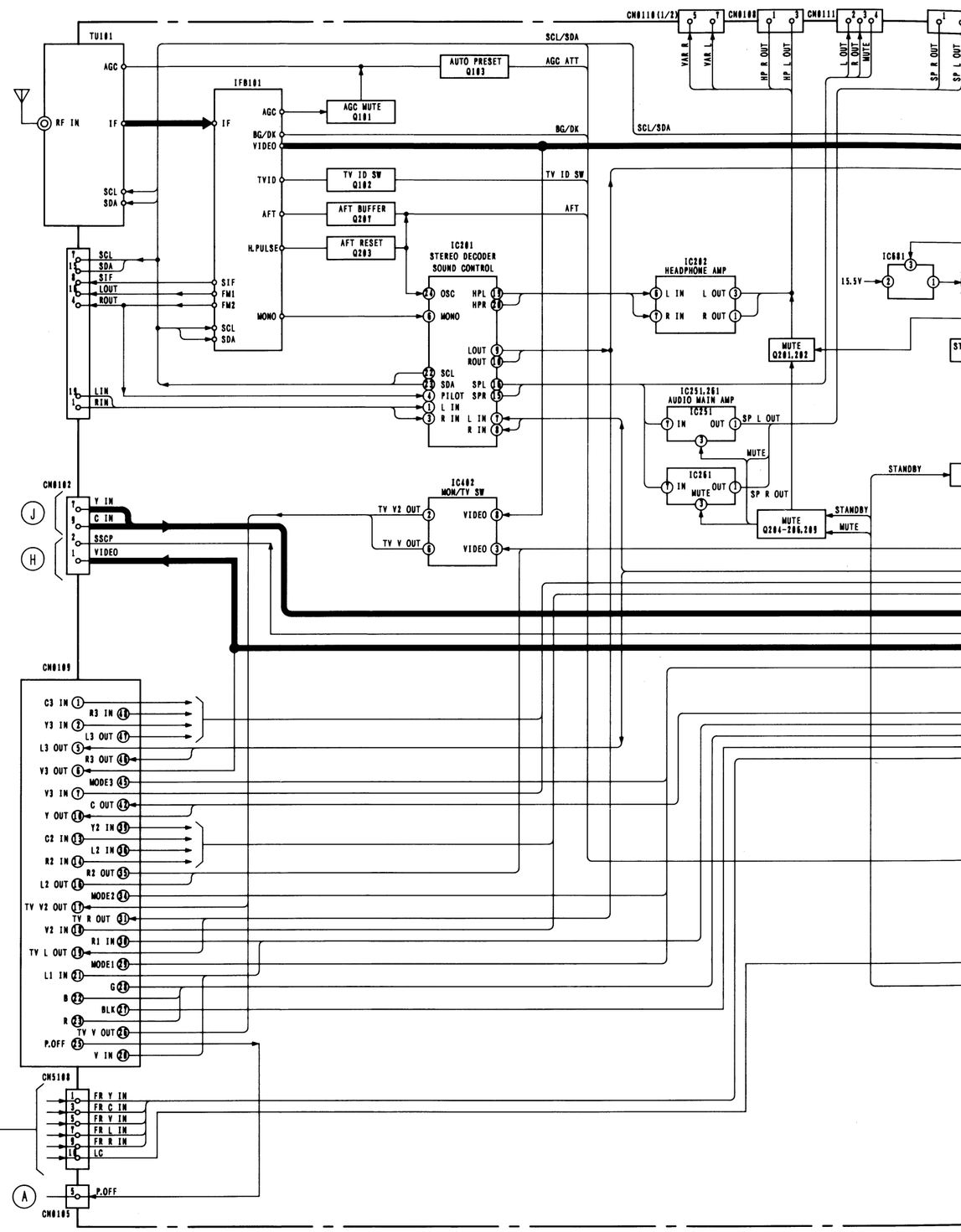

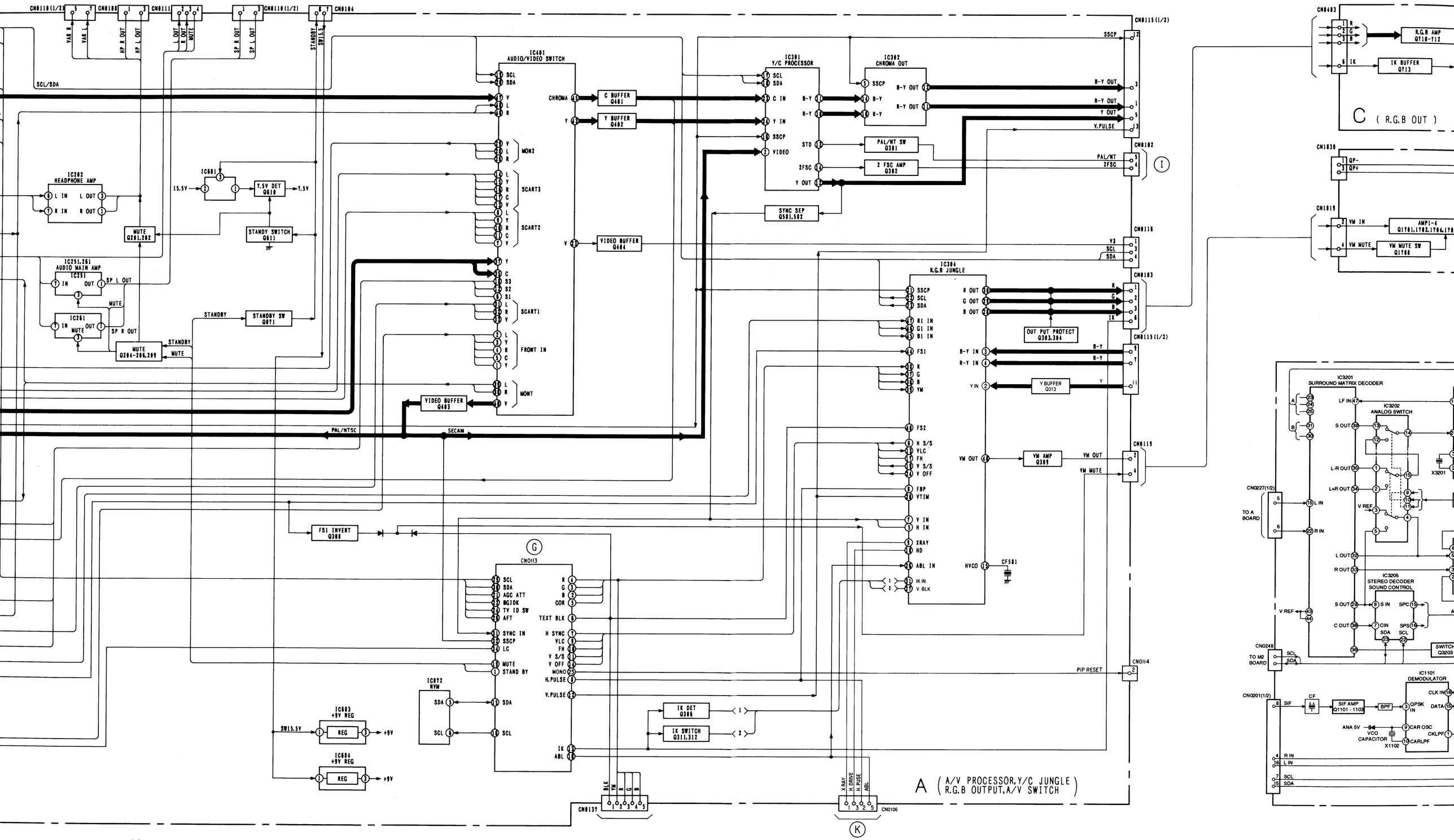
CN0110(1/2)
CN0108
CN0111
CN0110(1/2)
CN0104
VAR R
VAR L
HP R OUT
HP L OUT
L OUT
R OUT
MUTE
SP R OUT
SP L OUT
STANDBY SW15.5
SCL/SDA
IC202 HEADPHONE AMP
L IN
R IN
L OUT
R OUT
MUTE Q201,202
IC681
15.5V
T.5V DET Q618
7.5V
STANDBY SWITCH Q611
IC251,261 AUDIO MAIN AMP
IC251
IC261
SP L OUT
SP R OUT
MUTE
STANDBY
STANDBY SW Q871
MUTE Q204-206,209
IC401 AUDIO/VIDEO SWITCH
SCL
SDA
MON2
SCART3
SCART2
SCART1
FRONT IN
MONT
VIDEO BUFFER Q403
CHROMA
C BUFFER Q401
Y
Y BUFFER Q402
VIDEO BUFFER Q404
PAL/NTSC
SECAM
IC301 Y/C PROCESSOR
C IN
Y IN
SSCP
VIDEO
STD
2FSC
Y OUT
PAL/NT SW Q301
2 FSC AMP Q302
SYNC SEP Q501,502
IC302 CHROMA OUT
B-Y OUT
R-Y OUT
CN0115(1/2)
SSCP
B-Y OUT
R-Y OUT
Y OUT
V.PULSE
CN0102
PAL/NT
2FSC
I
CN0116
V3
SCL
SDA
CN0103
IC304 R.G.B JUNGLE
SSCP
SCL
SDA
R OUT
G OUT
B OUT
R
G
B
IK
OUT PUT PROTECT Q303,304
CN0115(1/2)
R1 IN
G1 IN
B1 IN
FS1
B-Y IN
R-Y IN
B-Y
R-Y
Y IN
Y BUFFER Q313
Y
R
G
B
YM
FS2
H S/S
VLC
FH
V S/S
V OFF
FBP
VTIM
V IN
H IN
XRAY
HD
ABL IN
IK IN
V. BLK
VM OUT
VM AMP Q309
VM OUT
VM MUTE
CN0119
HVCO
CF501
FS1 INVERT Q308
G
CN0113
SCL
SDA
AGC ATT
BGIDK
TV ID SW
AFT
SYNC IN
SSCP
LC
MUTE
STAND BY
R
G
B
COR
TEXT BLK
H SYNC
VLC
FH
V S/S
V OFF
MONO
H.PULSE
V.PULSE
IK
ABL
IC872 NVM
SDA
SCL
IC683 +9V REG
IC684 +9V REG
SW15.5V
REG
+9V
IK DET Q306
IK SWITCH Q311,312
BLK
YM
R
G
B
CN0131
X RAY
H. DRIVE
H. PULSE
ABL
CN0106
K
A (A/V PROCESSOR,Y/C JUNGLE R.G.B OUTPUT,A/V SWITCH)
CN0114
PIP RESET
CN0403
R
G
B
IK
R.G.B AMP Q710-712
IK BUFFER Q713
C (R.G.B OUT)
CN1830
QP-
QP+
CN1819
VM IN
VM MUTE
AMP1-4 Q1701,1702,1704,1705
VM MUTE SW Q1708
IC3201 SURROUND MATRIX DECODER
LF IN
IC3202 ANALOG SWITCH
S OUT
L-R OUT
L+R OUT
X3201
CN0227(1/2)
TO A BOARD
L IN
R IN
V REF
L OUT
R OUT
IC3205 STEREO DECODER SOUND CONTROL
S IN
SPC
CIN
SPS
SDA
SCL
CN0248
TO M2 BOARD
SWITCH Q3203
IC1101 DEMODULATOR
CN0201(1/2)
SIF
CF
SIF AMP Q1101-1103
BPF
QPSK IN
CLK IN
DATA
ANA 5V
VCO CAPACITOR
X1102
CAR OSC
CKLPF
CARLPF
R IN
L IN
SCL
SDA

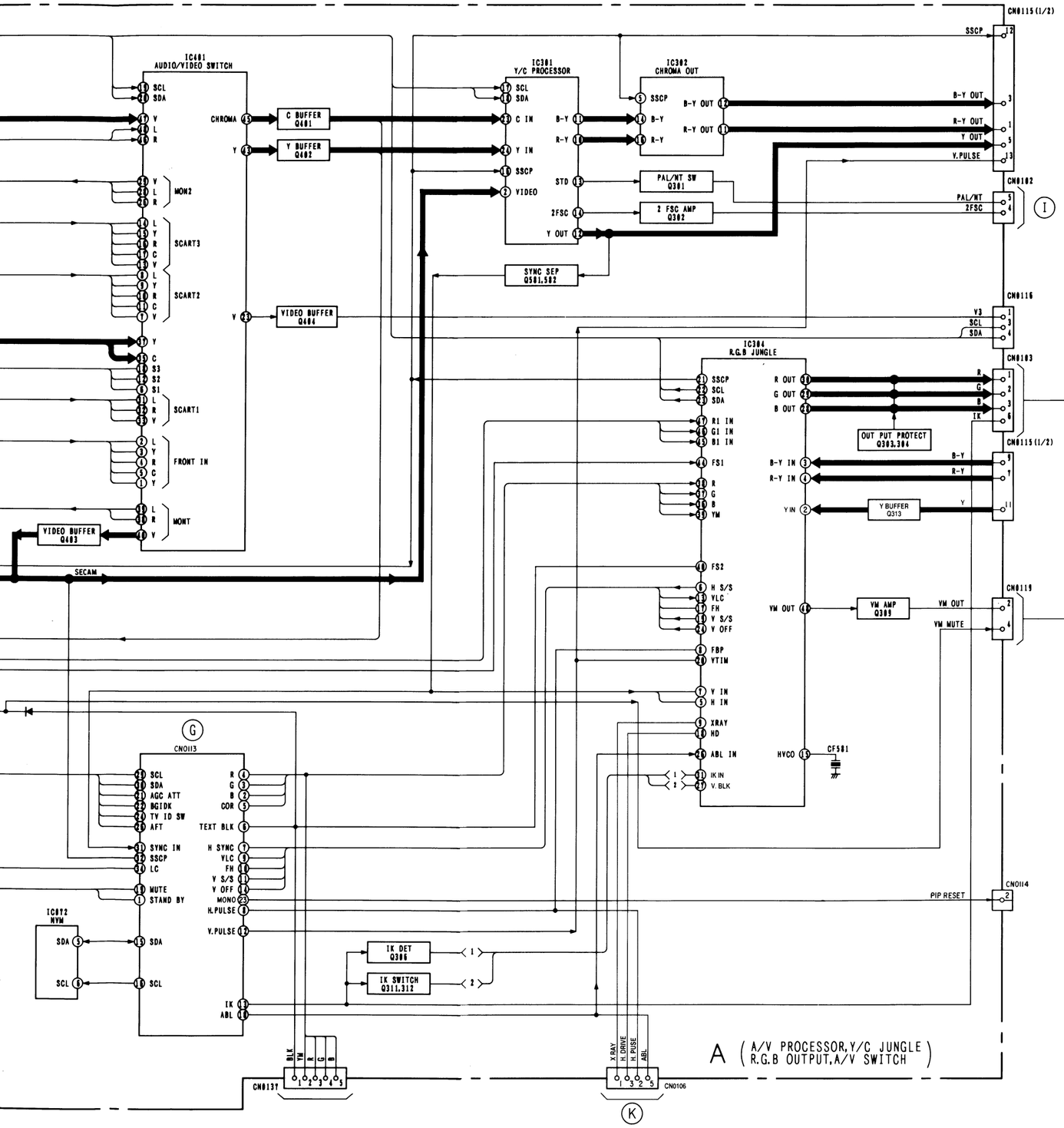
IC401
AUDIO/VIDEO SWITCH
IC301
Y/C PROCESSOR
IC302
CHROMA OUT
IC304
R.G.B JUNGLE
CN0115 (1/2)
CN0116
CN0102
CN0103
CN0119
CN0114
CN0113
CN0137
CN0106
IC872
NVM
C BUFFER Q401
Y BUFFER Q402
VIDEO BUFFER Q404
VIDEO BUFFER Q403
SYNC SEP Q501,502
PAL/NT SW Q301
2 FSC AMP Q302
OUT PUT PROTECT Q303,304
Y BUFFER Q313
VM AMP Q305
IK DET Q306
IK SWITCH Q311,312
MON2
SCART3
SCART2
SCART1
FRONT IN
MONT
SECAM
PIP RESET
A (A/V PROCESSOR,Y/C JUNGLE R.G.B OUTPUT,A/V SWITCH)

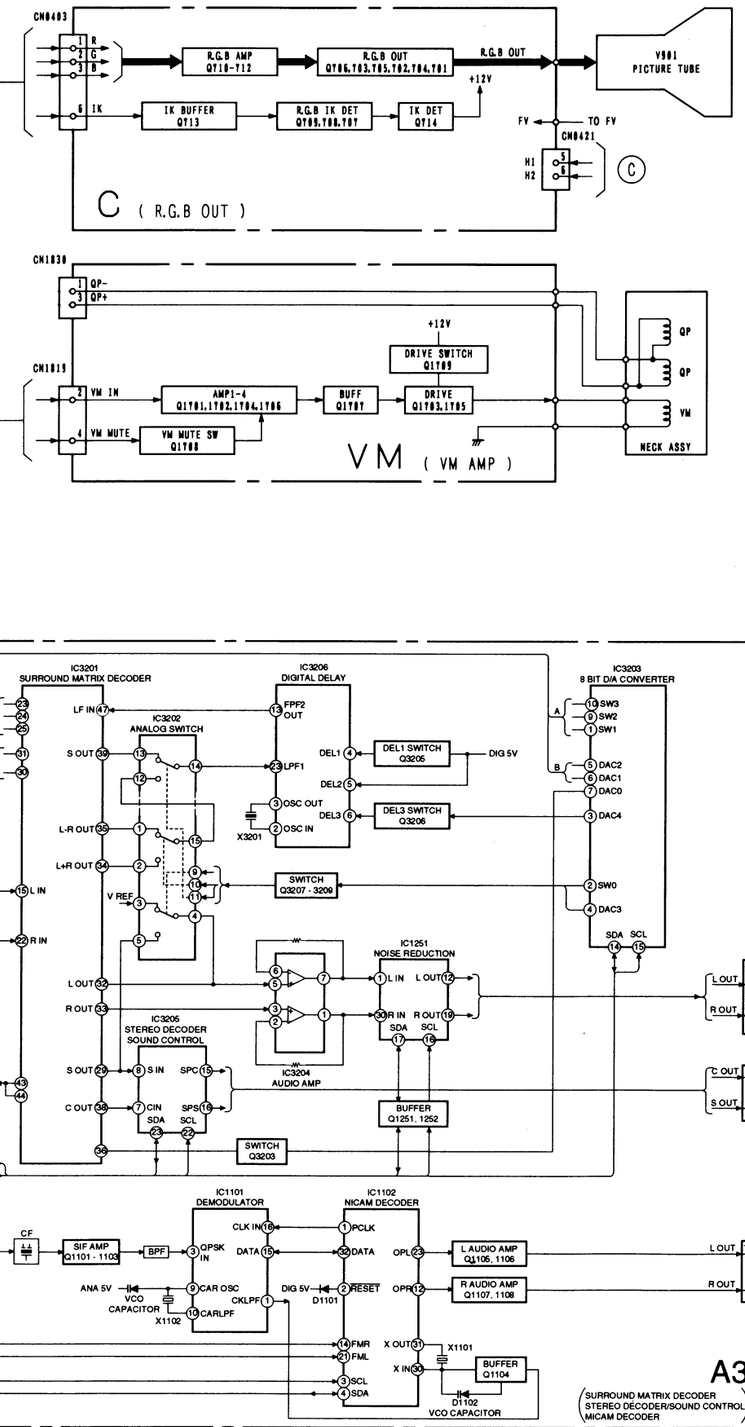
CN0403
R.G.B AMP Q710-712
R.G.B OUT Q706,703,705,702,704,701
V901 PICTURE TUBE
IK BUFFER Q713
R.G.B IK DET Q695,708,707
IK DET Q714
TO FV
CN0421
C (R.G.B OUT)
CN1030
CN1019
DRIVE SWITCH Q1709
AMP1-4 Q1701,1702,1704,1706
BUFF Q1707
DRIVE Q1703,1705
VM MUTE SW Q1708
NECK ASSY
VM (VM AMP)

IC3201
SURROUND MATRIX DECODER
IC3206
DIGITAL DELAY
IC3203
8 BIT D/A CONVERTER
IC3202
ANALOG SWITCH
DEL1 SWITCH Q3205
DEL3 SWITCH Q3206
SWITCH Q3207 - 3209
IC1251
NOISE REDUCTION
IC3205
STEREO DECODER SOUND CONTROL
IC3204
AUDIO AMP
BUFFER Q1251, 1252
SWITCH Q3203
CN0227(1/2)
CN0227(2/2)
CN0246
CN0248
TO A BOARD
TO M2 BOARD
IC1101
DEMODULATOR
IC1102
NICAM DECODER
SIF AMP Q1101 - 1103
L AUDIO AMP Q1105, 1106
R AUDIO AMP Q1107, 1108
BUFFER Q1104
CN0201(1/2)
CN0201(2/2)
A3
SURROUND MATRIX DECODER
STEREO DECODER/SOUND CONTROL
NICAM DECODER

5-2. CIRCUIT BOARDS LOCATION

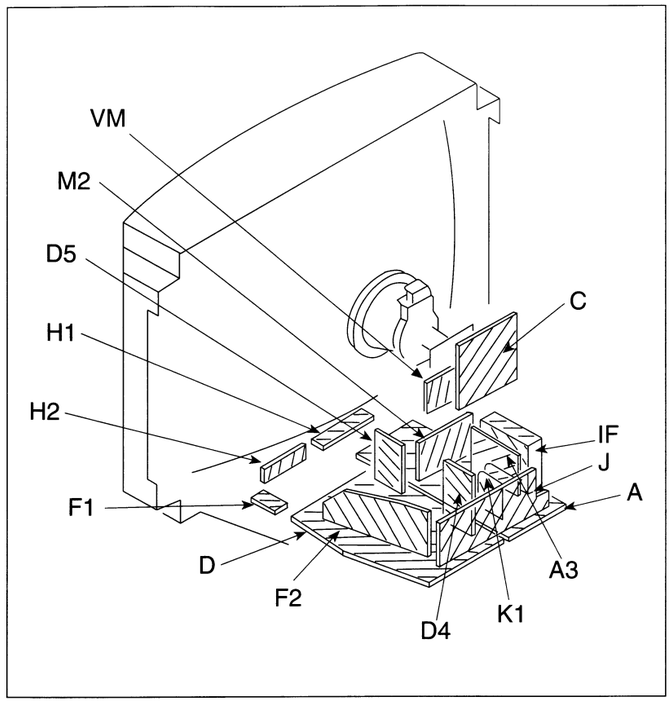

5-3. SCHEMATIC DIAGRAMS AND PRINTED WIRING BOARDS

Note :

- All capacitors are in μF unless otherwise noted.
  pF : μμF 50WV or less are not indicated except for electrolytic.
- Indication of resistance, which dose not have one for rating electrical power, is as follows.

Pitch : 5mm Rating electrical power : ¼W

- Chip resistor is in 1/10W.
- All resistors are in ohms.
  kΩ = 1000Ω, MΩ = 1000KΩ
- : nonflammable resistor.
- : fusible resistor.
- △ : internal component.
- ▭ : panel designation or adjustment for repair.
- All variable and adjustable resistors have charactristic curve B, unless otherwise noted.
- All voltages are in V.
- Readings are taken with a 10MΩ digital multimeter.
- Readings are taken with a color-bar signal input.
- Voltage variations may be noted due to normal production tolerances.
- ▬▬ : B+ bus.
- ▬ ▬ : B− bus.
- ⇒ : signal path.(RF)
- ⊥ : earth - ground
- ⏚ : earth - chassis

Reference information

RESISTOR	RN	: METAL FILM
	RC	: SOLID
	FPRD	: NONFLAMMABLE CARBON
	FUSE	: NONFLAMMABLE FUSIBLE
	RS	: NONFLAMMABLE METAL OXIDE
	RB	: NONFLAMMABLE CEMENT
	RW	: NONFLAMMABLE WIREWOUND
	※	: ADJUSTMENT RESISTOR
COIL	LF-8L	: MICRO INDUCTOR
CAPACITOR	TA	: TANTALUM
	PS	: STYROL
	PP	: POLYPROPYLENE
	PT	: MYLAR
	MPS	: METALIZED POLYESTER
	MPP	: METALIZED POLYPROPYLENE
	ALB	: BIPOLAR
	ALT	: HIGH TEMPERATURE
	ALR	: HIGH RIPPLE

Note: The components identified by shading and mark ⚠ are critical for safety. Replace only with part number specified.

Note: Les composants identifiés par une trame et par une marque ⚠ sont d'une importance critique pour la sécurité. Ne les remplacer que par des pièces de numéro spécifié.

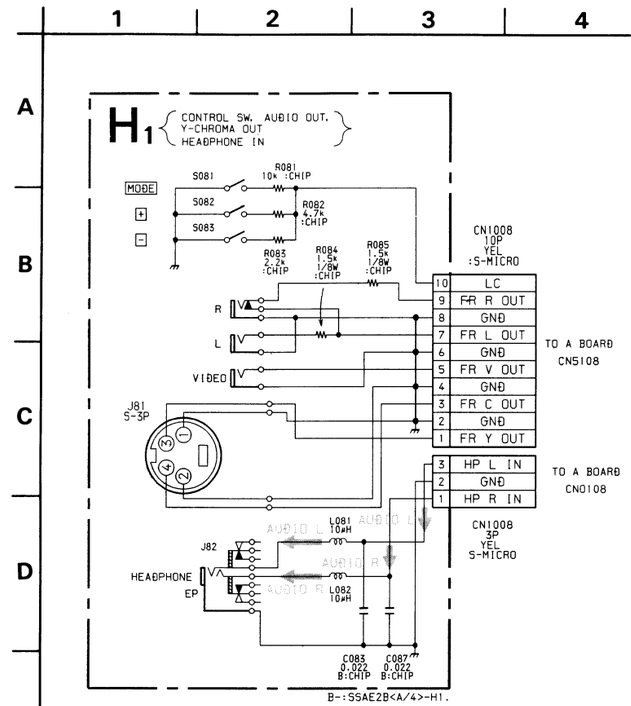

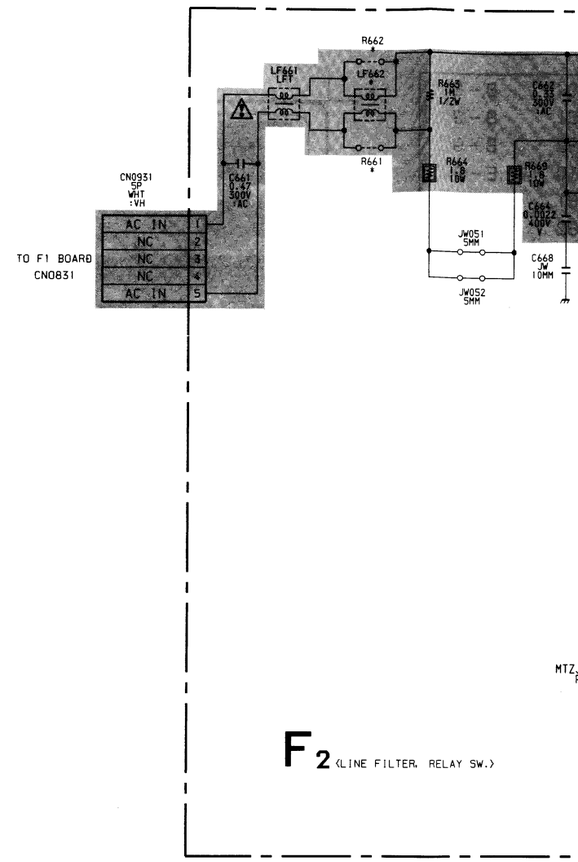

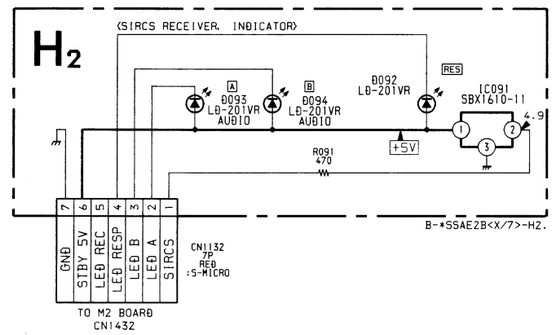

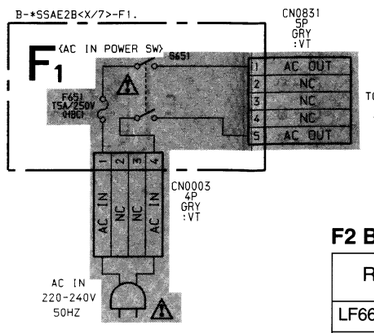

F2 BOA

Ref
LF662
R661
R662

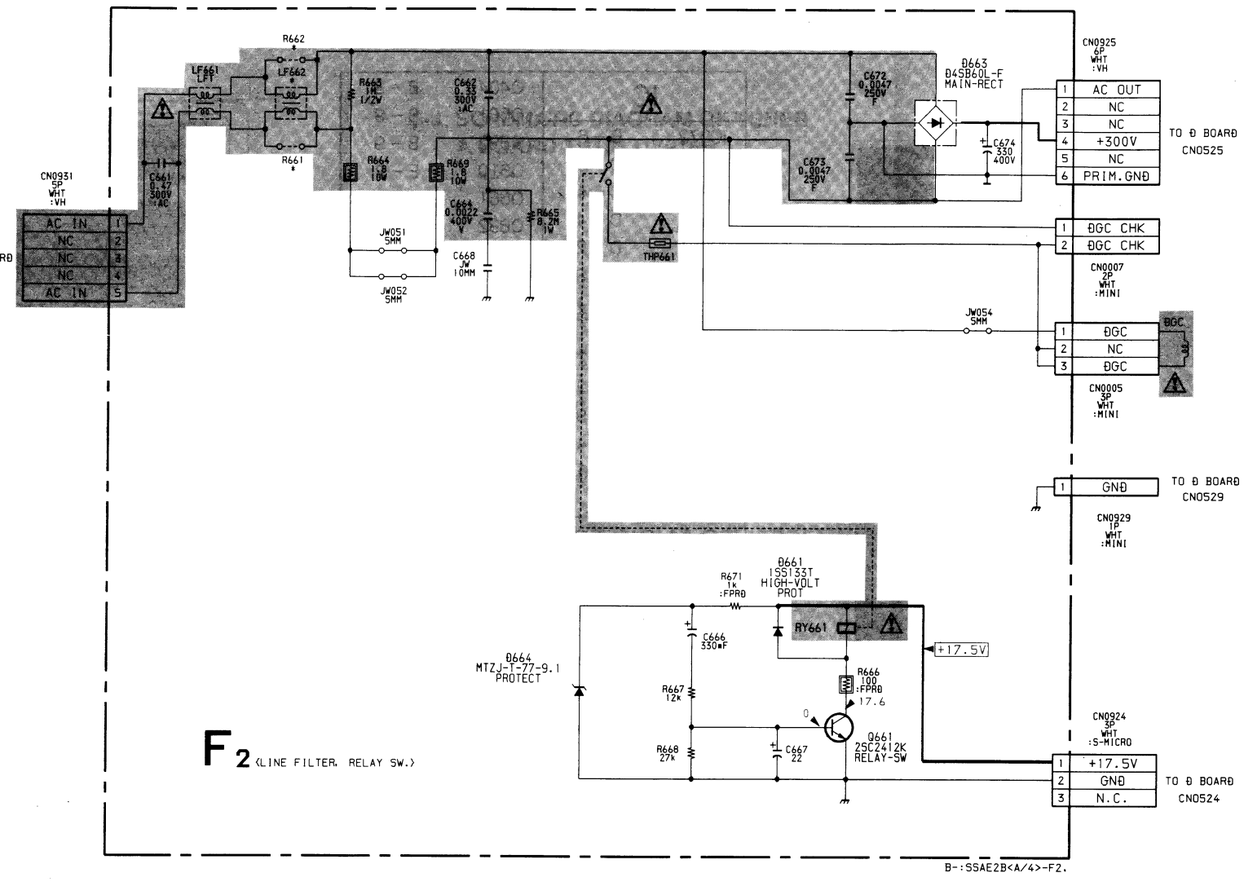

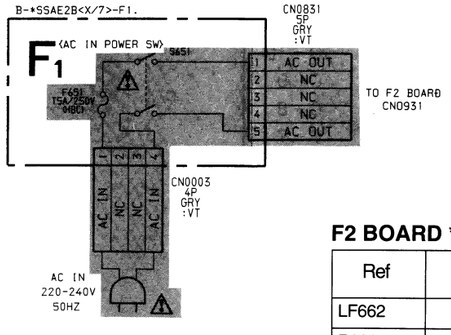

F2 BOARD * MARK

Ref	A2941A	A2941B	A2941D	A2943E	A294IK	A2942U
LF662	LFT	-	LFT	-	-	-
R661	-	JW 10MM	-	JW 10MM	JW 10MM	JW 10MM
R662	-	JW 10MM	-	JW 10MM	JW 10MM	JW 10MM

H1 [CONTROL SW, AUDIO OUT, Y – CHROMA OUT, HEADPHONE] **H2** [SIRCS RECEIVER INDICATOR] **F2** [LINE FILTER, RELAY SW] **F1** [A

– H1 BOARD –

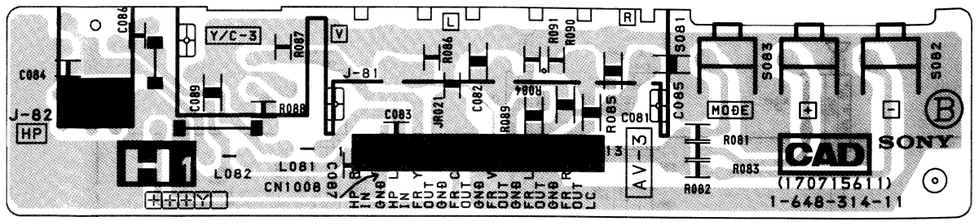

– H2 BOARD –

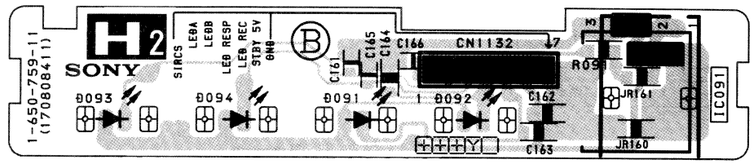

– F2 BOARD –

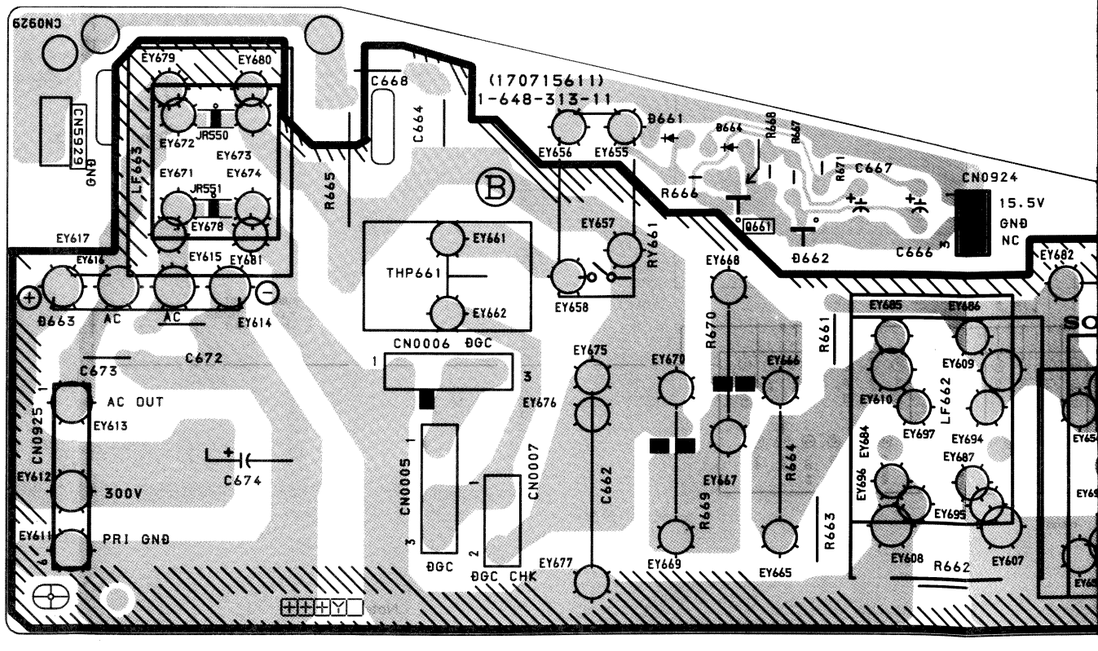

10 | 11 | 12 | 13

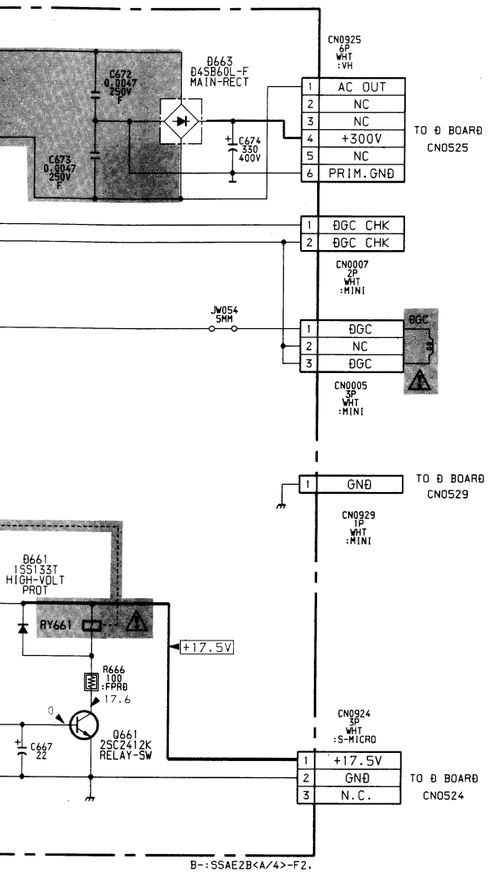

1B	A2941D	A2943E	A294IK	A2942U
	LFT	-	-	-
MM	-	JW 10MM	JW 10MM	JW 10MM
MM	-	JW 10MM	JW 10MM	JW 10MM

H1 [CONTROL SW, AUDIO OUT, Y – CHROMA OUT, HEADPHONE] **H2** [SIRCS RECEIVER, INDICATOR] **F2** [LINE FILTER, RELAY SW] **F1** [AC IN POWER SW]

– H1 BOARD –

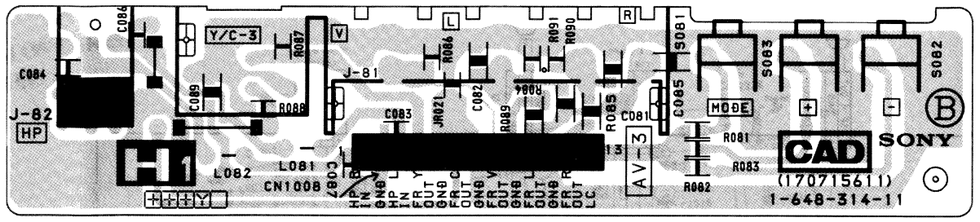

– H2 BOARD –

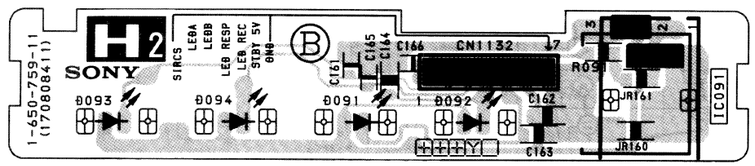

– F1 BOARD –

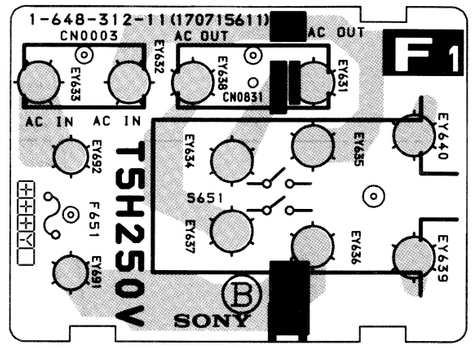

– F2 BOARD –

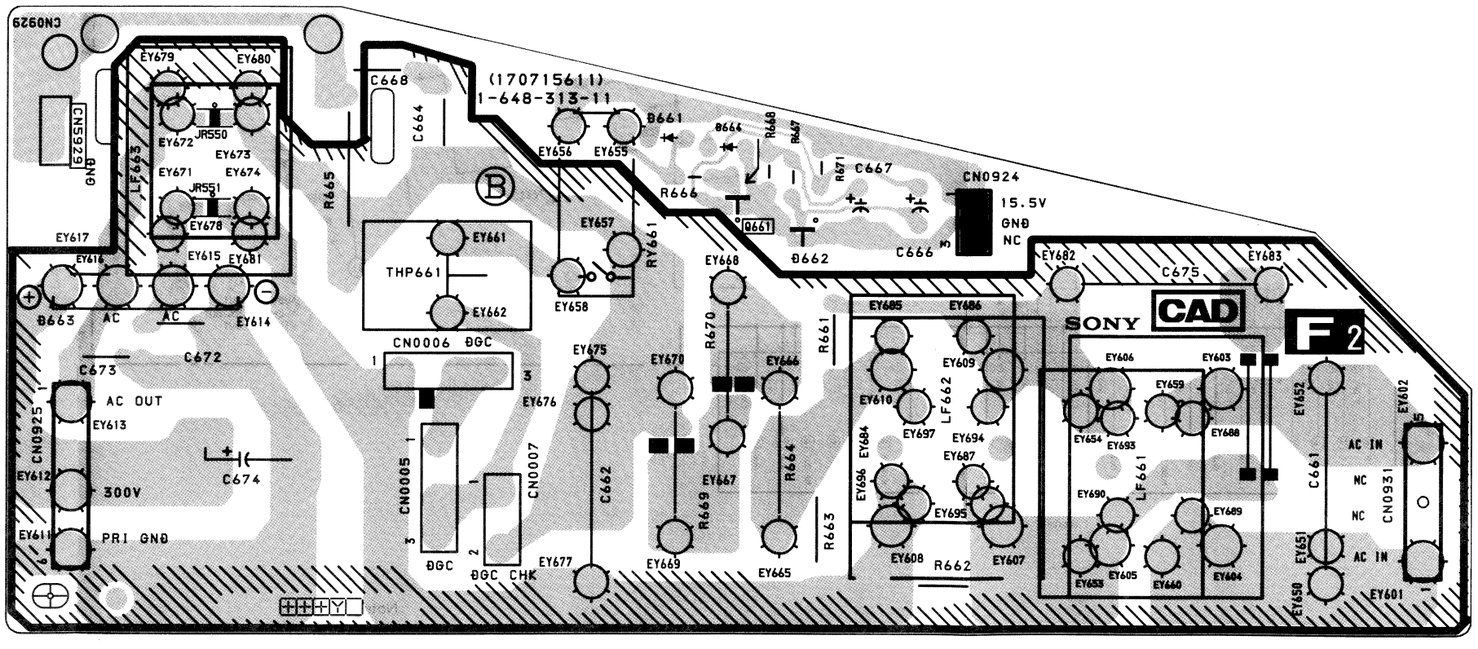

J AUDIO IN/OUT
Y – CHROMA IN/OUT
VIDEO IN/OUT

A TUNER AUDIO CONTROL,
AV SW, R.G.B. JUNGLE, Y/

– J BOARD –

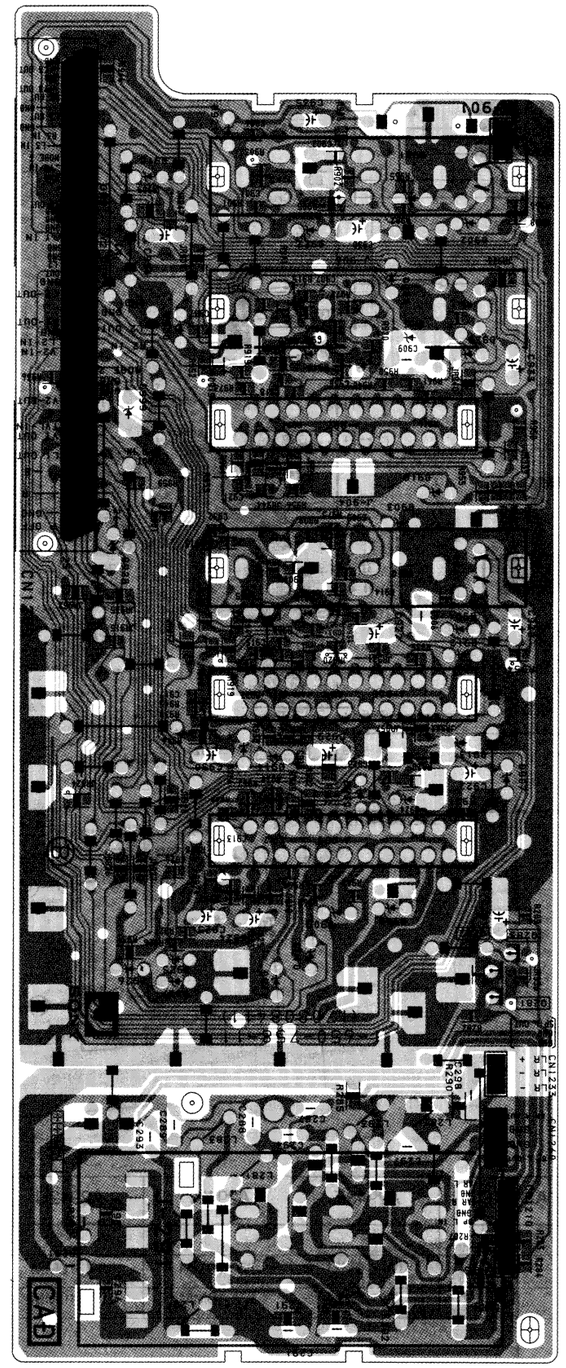

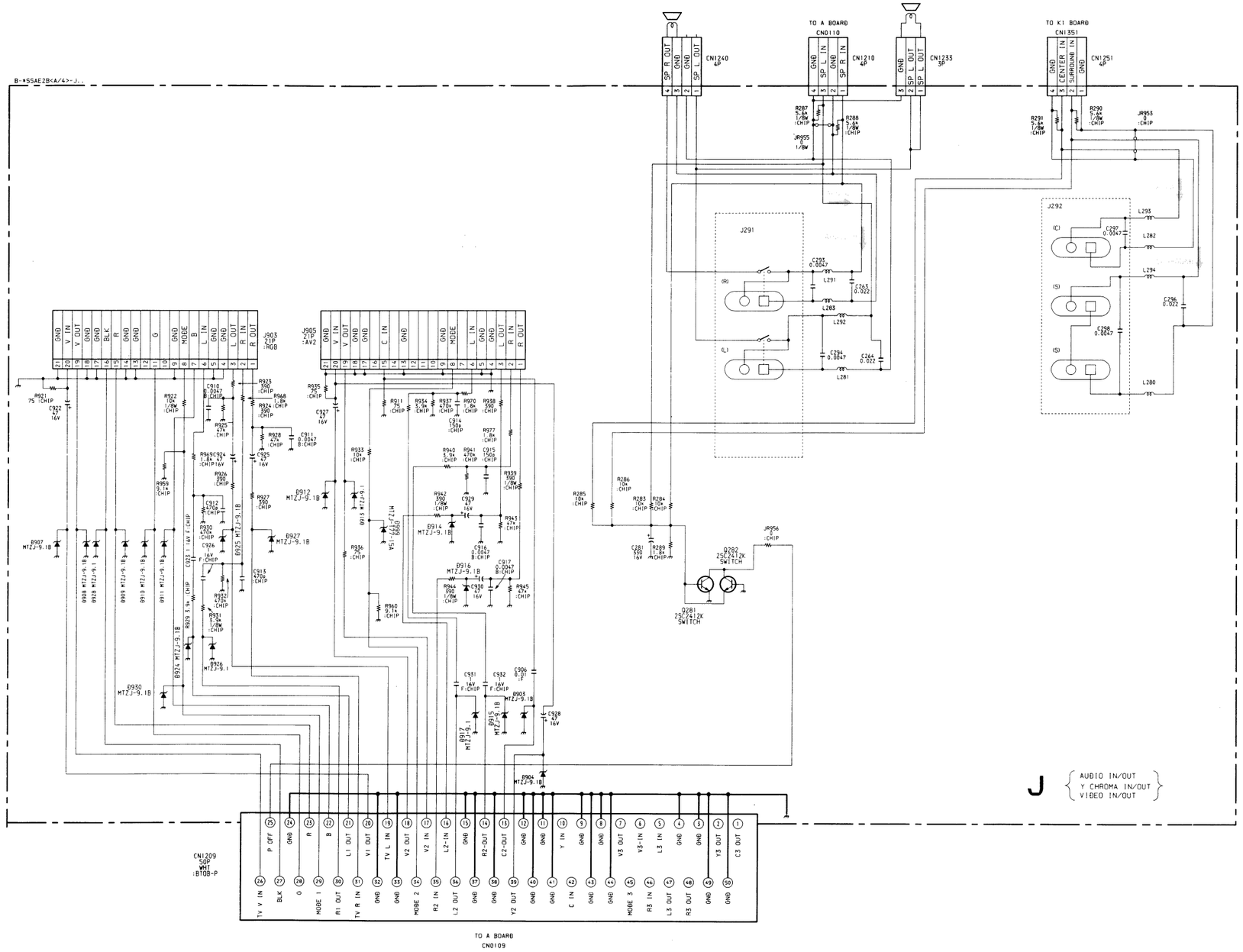

Note :

- : Pattern from the side which enables seeing.
- : Pattern of the rear side.

O IN/OUT
HROMA IN/OUT
O IN/OUT

A TUNER AUDIO CONTROL, AUDIO AMP
AV SW, R.G.B. JUNGLE, Y/C PROCESSOR

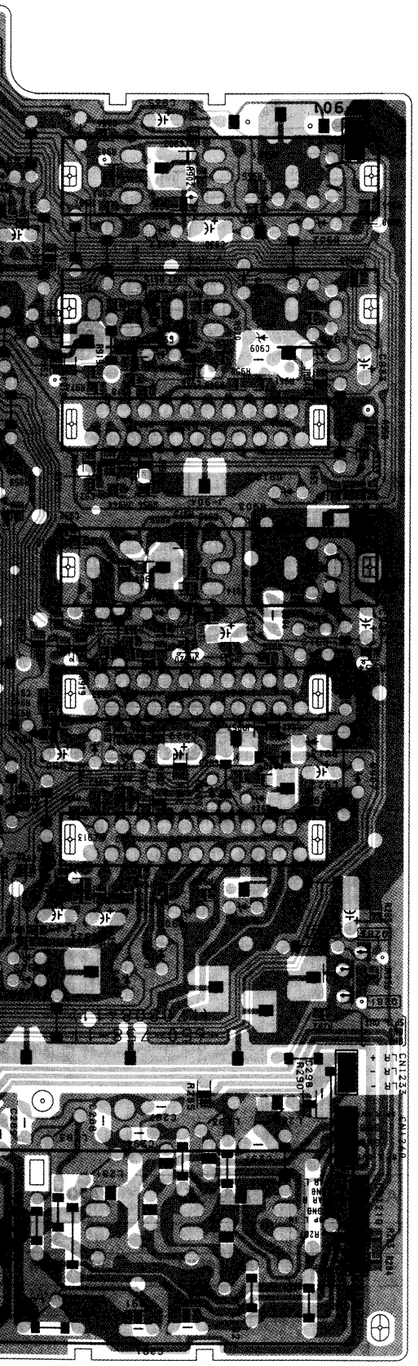

IC	
IC072	B – 6
IC201	C – 6
IC202	C – 4
IC251	D – 4
IC261	D – 2
IC301	A – 8
IC302	A – 10
IC304	C – 10
IC401	C – 2
IC402	D – 2
IC681	D – 9
IC684	C – 4
IC685	E – 8

TRANSISTOR	
Q071	D – 8
Q101	A – 3
Q102	A – 7
Q103	A – 3
Q201	D – 5
Q202	D – 5
Q203	A – 4
Q204	D – 3
Q205	E – 2
Q206	D – 2
Q207	B – 6
Q209	E – 7
Q210	A – 6
Q301	A – 7
Q302	B – 7
Q303	D – 10
Q304	D – 10
Q305	A – 8
Q306	D – 10
Q308	C – 9
Q309	C – 9
Q311	C – 8
Q312	C – 8
Q313	B – 8
Q314	C – 7
Q315	D – 7
Q401	C – 2
Q402	C – 2
Q403	C – 2
Q404	B – 3
Q581	B – 9
Q582	B – 9
Q610	E – 9
Q681	E – 7
Q682	D – 9

DIODE	
D068	B – 7
D069	A – 1
D071	A – 1
D073	A – 1
D075	A – 1
D077	B – 7
D078	B – 7
D079	B – 7
D101	B – 2
D206	D – 7
D207	E – 7
D208	D – 7
D209	D – 3
D210	D – 3
D211	E – 5
D212	E – 4
D213	D – 5
D214	C – 6
D301	B – 9
D302	A – 9
D304	B – 10
D305	C – 9
D306	D – 10
D307	D – 10
D308	D – 10
D311	C – 9
D312	C – 8
D313	C – 7
D381	C – 8
D401	B – 1
D403	B – 1
D405	A – 1
D406	B – 2
D407	B – 2
D571	B – 9
D681	E – 8
D683	D – 9

– **A BOARD** –

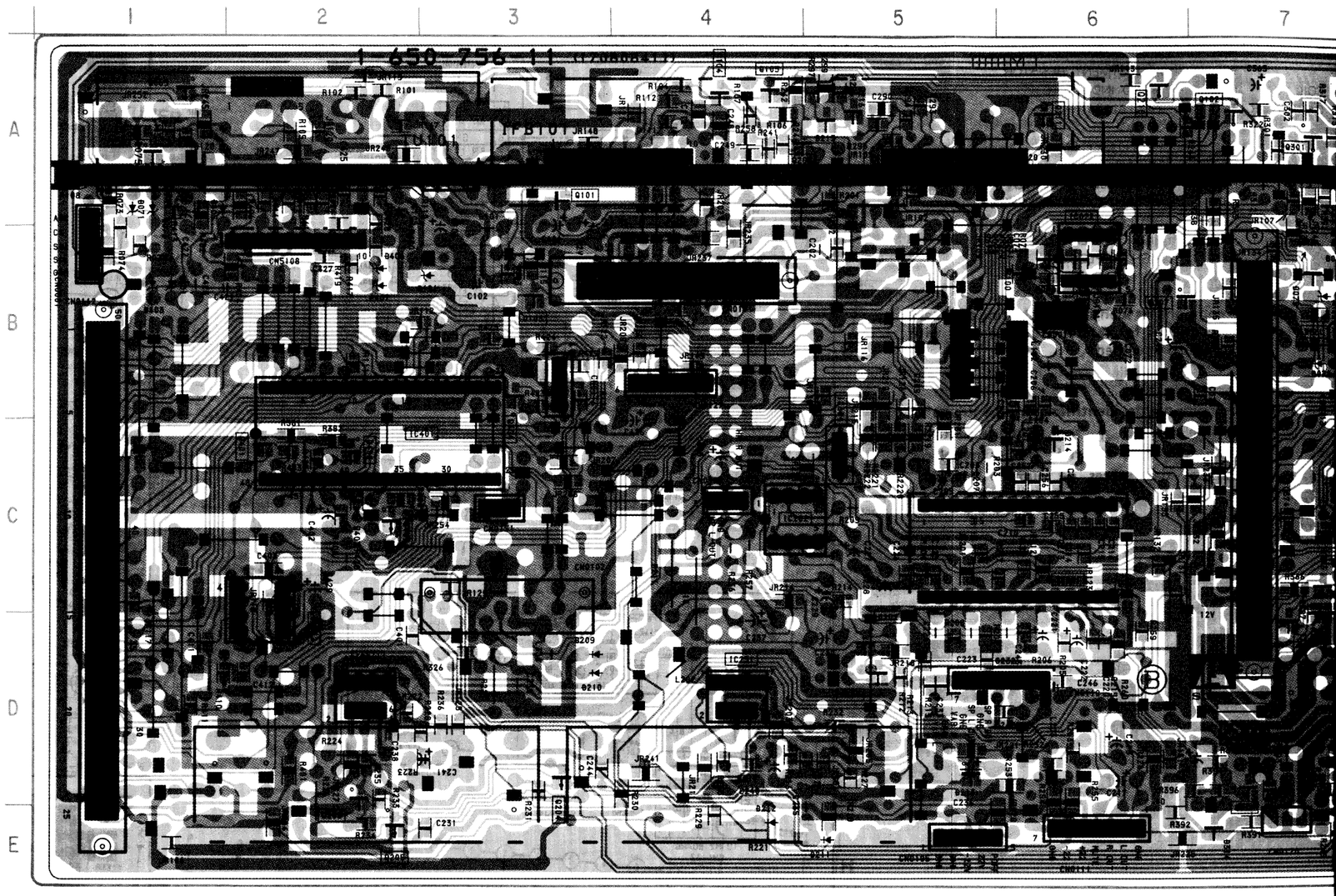

– A BOARD –

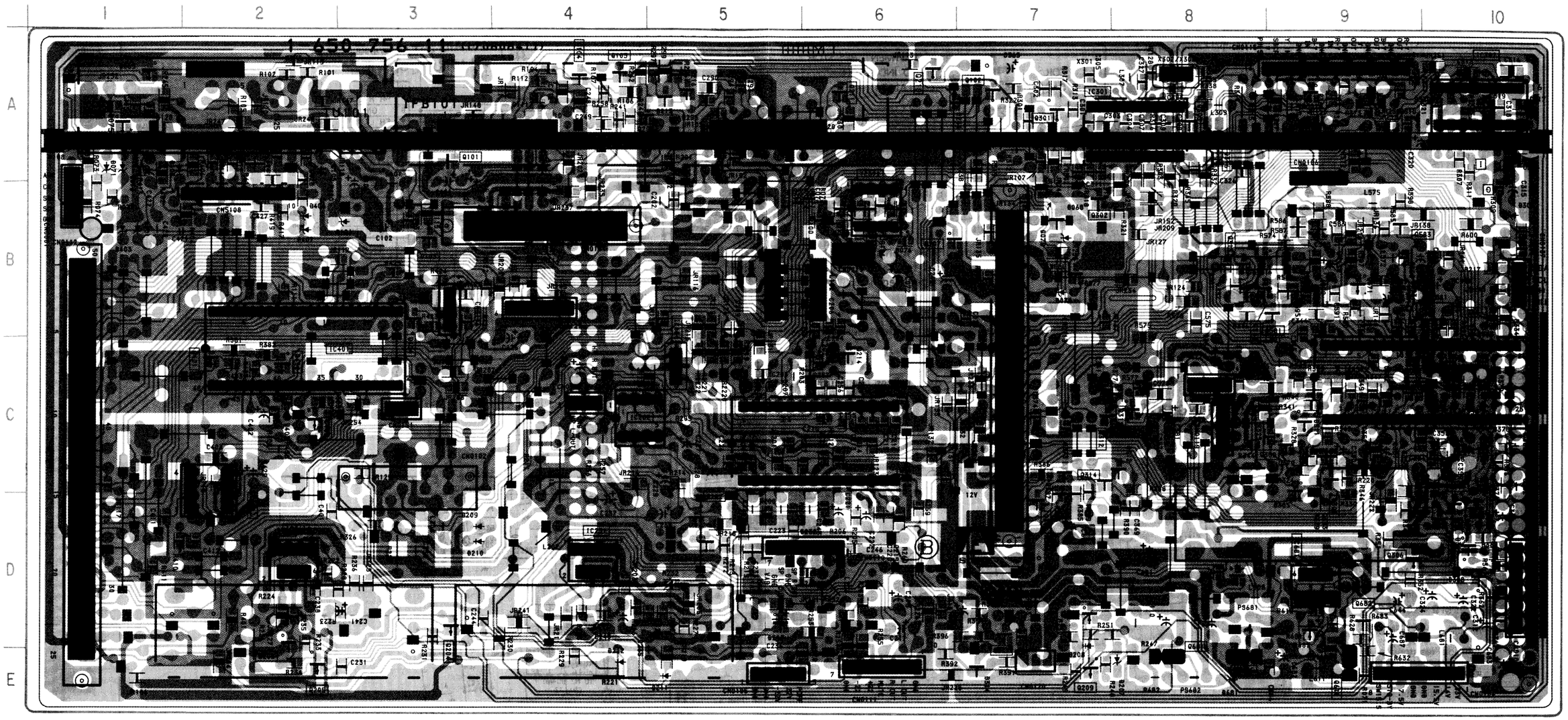

Note :

- : Pattern from the side which enables seeing.
- : Pattern of the rear side.

404	B – 3
581	B – 9
582	B – 9
610	E – 9
681	E – 7
682	D – 9

DIODE

068	B – 7
069	A – 1
071	A – 1
073	A – 1
075	A – 1
077	B – 7
078	B – 7
079	B – 7
101	B – 2
106	D – 7
107	E – 7
108	D – 7
109	D – 3
110	D – 3
111	E – 5
112	E – 4
113	D – 5
114	C – 6
201	B – 9
202	A – 9
204	B – 10
205	C – 9
206	D – 10
207	D – 10
208	D – 10
211	C – 9
212	C – 8
213	C – 7
231	C – 8
301	B – 1
303	B – 1
305	A – 1
306	B – 2
307	B – 2
371	B – 9
381	E – 8
383	D – 9

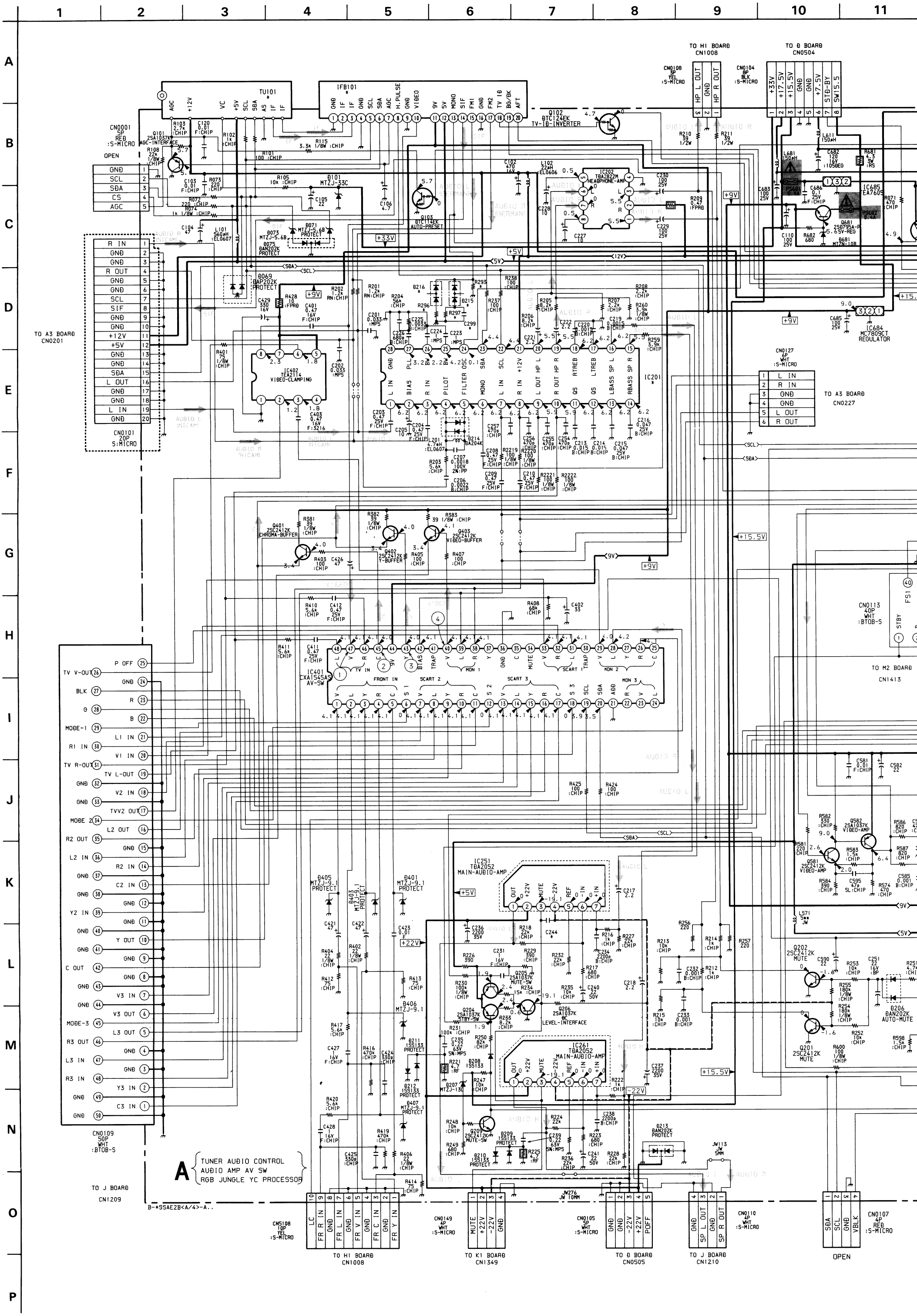
TU101
IFB101
Q102 DTC124EK TV-IØ-INVERTER
TO H1 BOARD CN1008
TO Ø BOARD CN0504
CN0108 3P YEL :S-MICRO
CN0104 8P BLK :S-MICRO
HP L OUT
GNØ
HP R OUT
+33V
+17.5V
+15.5V
GNØ
GNØ
+7.5V
STØ-BY
SW15.5
CN0001 5P RED :S-MICRO
OPEN
GNØ
SCL
SØA
CS
AGC
Q101 2SA1037K AGC-INTERFACE
Q103 DTC114EK AUTO-PRESET
IC202 TBA2822M HEADPHONE-AMP
IC685 EA7605
IC684 MC7809CT REGULATOR
Ø101 MTZJ-33C
Ø071 MTZJ-5.6B PROTECT
Ø073 MTZJ-5.6B
Ø075 ØAN202K PROTECT
Ø069 ØAP202K PROTECT
Ø681 MTZN-10B
Ø682 2SØ795A-R 5.65V-REG
TO A3 BOARD CN0201
R IN
R OUT
SCL
SIF
+12V
+5V
SØA
L OUT
L IN
CN0101 20P S:MICRO
IC402 TEA2114 VIDEO-CLAMPING
IC201
L IN
BIAS
R IN
PILOT
FILTER OSC
MONO
L IN
R IN +12V
L OUT HP L
R OUT HP R
RTREB
QS
LTREB
QS
LBASS SP L
RBASS SP R
CN0127 6P WHT :S-MICRO
TO A3 BOARD CN0227
Q401 2SC2412K CHROMA-BUFFER
Q402 2SC2412K Y-BUFFER
Q403 2SC2412K VIDEO-BUFFER
IC401 CXA1545AS AV-SW
FRONT IN
SCART 2
SCART 3
MON 3
TV IN
MON 1
SCART 1
MON 2
TO M2 BOARD CN1413
CN0113 40P WHT :BTOB-S
P OFF
TV V-OUT
GNØ
BLK
R
G
B
MØDE-1
L1 IN
R1 IN
V1 IN
TV R-OUT
TV L-OUT
GNØ
V2 IN
GNØ
TVV2 OUT
MØDE 2
L2 OUT
R2 OUT
GNØ
L2 IN
R2 IN
GNØ
C2 IN
GNØ
GNØ
Y2 IN
GNØ
GNØ
Y OUT
GNØ
C OUT
GNØ
V3 IN
GNØ
V3 OUT
MØDE-3
L3 OUT
R3 OUT
GNØ
L3 IN
GNØ
R3 IN
Y3 IN
GNØ
C3 IN
GNØ
CN0109 50P WHT :BTOB-S
IC251 TBA2052 MAIN-AUDIO-AMP
IC261 TØA2052 MAIN-AUDIO-AMP
OUT
+22V
MUTE
-22V
REF
IN
+IN
Q205 2SA1037K MUTE-SW
Q204 2SA1037K STBY-SW
Q206 2SA1037K LEVEL-INTERFACE
Q202 2SC2412K MUTE
Q201 2SC2412K MUTE
Q582 2SA1037K VIDEO-AMP
Q581 2SC2412K VIDEO-AMP
Ø206 ØAN202K AUTO-MUTE
Ø213 ØAN202K PROTECT
A
TUNER AUDIO CONTROL
AUDIO AMP AV SW
RGB JUNGLE YC PROCESSOR
TO J BOARD CN1209
B-*SSAE2B<A/4>-A..
CN5108 10P YEL :S-MICRO
LC
FR R IN
GNØ
FR L IN
GNØ
FR V IN
GNØ
FR C IN
GNØ
FR Y IN
TO H1 BOARD CN1008
CN0149 4P WHT :S-MICRO
MUTE
+22V
-22V
GNØ
TO K1 BOARD CN1349
CN0105 5P WHT :S-MICRO
GNØ
GNØ
-22V
+22V
POFF
TO Ø BOARD CN0505
CN0110 4P WHT :S-MICRO
GNØ
SP L OUT
GNØ
SP R OUT
TO J BOARD CN1210
SØA
SCL
GNØ
VBLK
CN0107 4P RED :S-MICRO
OPEN

TO Ð BOARÐ
CN0504

+33V | +17.5V | +15.5V | GNÐ | GNÐ | +7.5V | STÐ-BY | SW15.5

L611 150uH
C682 120 16V :1050EG
R681 0.3 3W :RS
L681 150uH
C686 0.1 25V F:CHIP
IC685 EA7605
Q681 2SD795A-F 5.65V-REG
C110 100 25V
R682 680
Ð681 MTZN-10B
R071 470 :CHIP
Q071 ÐTA124EK STBY-INVERTER
C071 56 16V :1050EG
+12V
+15.5V
9.0
C685 100 25V
IC684 MC7809CT REGULATOR
+9V

R242 4.7k 1/8W :CHIP
R241 4.7k :CHIP
R246 100k :CHIP
R258 47k :CHIP
Q210 2SC2412K 5W
C249 330p :CHIP
Q203 2SC2412K H-PULSE-AMP
IC681 TÐA8138A 12V/5V-REG
+7.5V +14V 4.9 NC +12V +5V
Q207 2SC2412K AFT-BUFF
R244 6.8k :CHIP
R245 47k :CHIP
C242 1
C248 150p :3216
Q610 2SB734 7.5V-5W
R628 470
R619 15k :CHIP
R616 270 1/8W :CHIP
R683 10k :CHIP
C687 22
Q682 ÐTC114EK
Ð683 ÐAP202K
C644 22
C681 100 25V
R301 470 :CHIP
R302 470 :CHIP
R319 470
R318 470 :CHIP
C311 0.1 25V F:CHIP
C310 0.1 25V F:CHIP
R304 100 1/8W :CHIP
R303 100 1/8W :CHIP
R632 4.7k :CHIP
R076 2.2k :CHIP
Ð068 ÐAP202K PROTECT
R077 100 :CHIP
Ð079 MTZJ5.6B
Ð078 MTZJ5.6B
C072 220 16V
IC072 ST24C16C
C074 220p B:CHIP
Ð077 ÐAN202K PROTECT
JR272 0 :CHIP
Ð301 ÐAN202K
C365 220 16V
IC301 TÐA9145/N2B
Y IN | C IN | TEST | C | Y | GNÐ | SÐA | SCL | SSCP | 2FSC | STÐ
+8V | VIDEO | 4.43 | 3.58 | PLL | GNÐ | R-Y | B-Y | Y
C301 0.1 25V F:CHIP
C303 2.2 16V F:3216
C304 0.1 25V B:CHIP
C305 15p :CHIP
C306 15p :CHIP
C307 0.0047 B:CHIP
C308 0.047 25V B:CHIP
C309 0.1 25V B:CHIP
R316 33k :CHIP
R338 270 :CHIP
R314 220
R315 220
C360 36p :CHIP
X301 4.43MHz
X302 3.58MHz
L309 15uH :EL0606
R312 470
R322 470 :CHIP
C302 0.1 25V F:CHIP
C325 56p :CHIP
L307 4.7uH :EL0606
JR258 0
JW243 10MM
JR153 0
+12V
R337 470 :CHIP
Q313 2SA1037 Y-BUFF
R336 150 :CHIP
R393 10k :CHIP
R391 6.8k :CHIP
R396 22k :CHIP
R394 22k :CHIP
Q317 2SC2412K
Ð314 ÐAN202K
C346 22uF
R392 3.3k :CHIP
R395 56k :CHIP
+5V

IC302 TÐA4661V2 CHROMA-BASE-BANÐ ÐELAY-LINE
VCC | R-Y IN | GNÐ | B-Y IN | SSCP | B-Y OUT | R-Y OUT | GNÐ | VCC
C314 0.1 25V F:CHIP
C316 0.1 F:3216
C317 27p :CHIP
R305 270 :CHIP
R306 270 :CHIP
C315 47
R307 12k :CHIP
R309 10 :CHIP
R311 4.7k :CHIP
Ð304 MTZJ-5.6B
R310 10 :CHIP
C320 47
C321 0.1 25V F:CHIP
C312 47
C313 0.1 F:3216
Q314 2SC2412K SW
Ð313 ÐAN202K
R366 39k 1/8W :CHIP
R385 33k :CHIP
R388 10k :CHIP
R389 8.2k :CHIP
Ð312 ÐAP202K
Q315 2SC2412K ÐELAY
R390 27k :CHIP
R387 4.7k :CHIP
R386 10k :CHIP
C369 100p :CHIP

CN0127 6P WHT :S-MICRO
L IN | R IN | GNÐ | GNÐ | L OUT | R OUT
TO A3 BOARÐ CN0227

CN0113 40P WHT :BTOB-S
STBY | B | G | R | COR | TEXT BLK | 5V STBY | H SYNC | LC | H PULSE | 5V | VLC | FH | V S/S | SYNC IN | V PULSE | SCL | IK | V OFF | SÐA | AFT | ÐGNÐ | TV IÐ | MONO | BIG ÐLK | AGC ATT
FS1 | JGNÐ | 12V | 5V | JGNÐ | 5V | VIDEO | SBA | ÐGNÐ | CS | SÐA | SCL | BLK | ABL | MUTE | ÐGNÐ
TO M2 BOARÐ CN1413

C581 0.01 F:CHIP
C582 22
R582 330 :CHIP
Q582 2SA1037K VIDEO-AMP
R581 220 :CHIP
Q581 2SC2412K VIDEO-AMP
R583 1.5k :CHIP
C595 47p SL:CHIP
R584 390 :CHIP
R574 470 :CHIP
R586 820 :CHIP
C583 470p :CHIP
R587 820 :CHIP
C585 0.001 B:CHIP
R589 10k :CHIP
R597 22k 1/8W :CHIP
R588 150k :CHIP
L571 5uH JW
Q202 2SC2412K MUTE
C590 22
R253 10k :CHIP
C251 22 1W :BP
R251 4.7k :CHIP
R255 180k 1/8W :CHIP
R254 180k 1/8W :CHIP
R252 10k :CHIP
Ð206 ÐAN202K AUTO-MUTE
Q201 2SC2412K MUTE
R600 100 1/8W :CHIP
Q583 2SC2412K
R585 5.6k :CHIP
R598 1.5k :CHIP
Q311 ÐTA144EK 1K-5W
C344 1 16V F:3216
C345 1 16V F:CHIP
C574 100p :CHIP
R575 350 1/8W :CHIP
IC304 CXA1587S RGB-JUNGLE
FH/2FH | VM OUT | Y IN | RI IN | G IN | GI IN | B-Y IN | BI IN | H IN | FS1 | H S/S | APEÐ | V IN | IREF1 | FBP IN | VCC1 | XRAY | FS2 | VCC2 | HSW | IREF2 | RZ IN | VCC3 | G2 IN | VLC | B2 IN | GNÐ2 | GNÐ1 | HVCO | R S/H | AFC | G S/H | FH | B S/H | HÐ OUT | IK IN | V S/S | R OUT | VTIM | G OUT | SSCP | B OUT | SCL | VBLK | SÐA | ABL IN | V OFF ABL FIL
C343 0.1 25V B:CHIP
C586 0.022 B:3216
C587 1
C588 1 16V F:CHIP
C589 100 25V
R591 10k :CHIP
R592 27k 1/8W :CHIP
R593 8.2k :CHIP
C599 0.01 B:CHIP
R580 1k :CHIP
C593 0.0033 B:CHIP
R594 3.3k :CHIP
R595 470 :RN-CP
CF581 CSB500F2
C591 2.2
R596 5.6k :CHIP
C592 0.0047 B:CHIP
Q312 ÐTC114EK IK-SW
R333 220 1/8W :CHIP
R334 220 1/8W :CHIP
Ð071 ÐA204K
R590 1k :CHIP
L572 5uH JW
C347 16V F:3216
C348 1 16V F:CHIP
C349 1 16V F:CHIP
C350 10
C342 0.1 25V B:3216
C353 1 16V F:CHIP
C354 1 16V F:CHIP
C355 1 16V F:3216
C356 0.22 16V
C357 0.22 25V
C358 0.22 25V
C359 10
R339 100 :CHIP
R340 100 :CHIP
R341 100 :CHIP
R342 220 :CHIP
R347 27k :CHIP
R343 75 :CHIP
R344 75 :CHIP
R345 75 1/8W :CHIP
R346 75 :CHIP
C351 100 10V
L508 5uH JW
R325 470 :CHIP
Q309 2SC2413K AMP
R328 100 :CHIP
R324 1k :CHIP
R329 82 :CHIP
C323 560p :CHIP
R330 1.5k :CHIP
Q308 2SA1037K VM-SW
Ð305 ÐAN202K VM-MUTE
CN0119 4P YEL :S-MICRO
GNÐ | VM OUT | +12V | VM MUTE
TO VM BOARÐ CN1819
R358 180 :CHIP
R357 470 :CHIP
R351 10k :CHIP
Q306 2SA1037K BUFFER
R352 220 :CHIP
C361 22p :CHIP
R360 220 :CHIP
R380 2.2k :CHIP
R355 220 :CHIP
R354 220 :CHIP
R379 2.2k 1/8W :CHIP
R378 2.2k :CHIP
R356 220 :CHIP
R376 4.7k :CHIP
C362 0.22 63V :MPS
C363 10
Ð381 MTZJ-7.5A V-OFF-MUTE
C366 1
Ð308 ÐA204K RGB-MUTE1
R359 220 :CHIP
R361 220 :CHIP
Ð306 ÐAN202K
Ð307 ÐAN202K
Q303 2SA1037K
C324 47
Q304 ÐTC114EK RGB-MUTE-2
R362 15k :CHIP
R331 100k :CHIP
C322 22
R578 47k 1/8W :CHIP
C575 0.22 25V B:3216
R577 47k :CHIP
C576 0.047 25V B:3216
L575 1.0mH
R377 1.2k :CHIP
C341 0.1 25V B:3216
CN0103 8P REÐ :S-MICRO
R OUT | G OUT | B OUT | +12V | GNÐ | IK | GNÐ | GNÐ
TO C BOARÐ CN0403
CN0107 4P REÐ :S-MICRO
SÐA | SCL | GNÐ | VBLK
OPEN
CN0106 5P BLK :S-MICRO
XRAY | H PULSE | HÐ | GNÐ | ABL
TO Ð BOARÐ CN0506

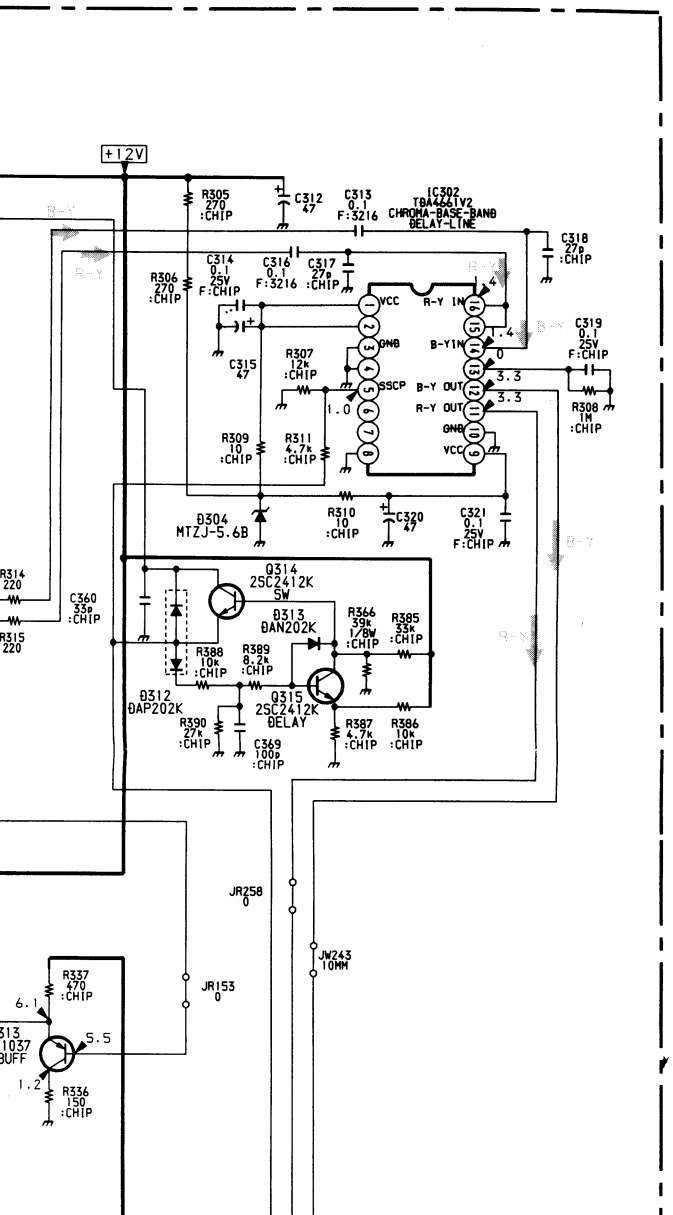

WAVEFORMS A BOARD

① PAL 1.1 Vp-p (H)	① SECAM 1.2 Vp-p (H)	① NTSC 1.4 Vp-p (H)	② PAL 1.9 Vp-p (H)	② SECAM 1.3 Vp-p (H)
② NTSC 1.8 Vp-p (H)	③ PAL 2.3 Vp-p (H)	③ SECAM 2.2 Vp-p (H)	③ NTSC 2.7 Vp-p (H)	④ PAL 2.3 Vp-p (H)
④ SECAM 2.4 Vp-p (H)	④ NTSC 2.8 Vp-p (H)	⑤ PAL 0.6 Vp-p (H)	⑤ SECAM 1.2 Vp-p (H)	⑤ NTSC 0.5 Vp-p (H)
⑥ PAL 0.8 Vp-p (H)	⑥ SECAM 1.5 Vp-p (H)	⑥ NTSC 0.7 Vp-p (H)	⑦ PAL, SECAM 0.5 Vp-p (H)	⑦ NTSC 0.6 Vp-p (H)
⑧ PAL 0.5 Vp-p (H)	⑧ SECAM 0.4 Vp-p (H)	⑧ NTSC 0.6 Vp-p (H)	⑨ PAL, SECAM 1.5 Vp-p (H)	⑨ NTSC 1.5 Vp-p (H)
⑩ PAL, SECAM 1.2 Vp-p (H)	⑩ NTSC 1.0 Vp-p (H)	⑪ 5.2 Vp-p (H)	⑫ 6.7 Vp-p (H)	⑬ 0.12 Vp-p(540KHZ)
⑭ 4.7 Vp-p (H)	⑮ 3.8 Vp-p (H)	⑯ 5.0 Vp-p (H)	⑰ 8.9 Vp-p (H)	⑱ 3.3 Vp-p (H)
⑲ 3.6 Vp-p (H)	⑳ 4.1 Vp-p (H)			

Voltages indicated with the mark ※ on the schematic diagram are shown in the table below.

A BOARD

	PAL	SECAM	NTSC3.58	NTSC4.43
IC301 ⑬	0.0	0.0	4.8	4.9
⑮	0.0	5.0	5.0	0.0
⑰	4.7	4.2	3.6	4.1
⑱	4.8	4.4	4.6	4.8
Q301(B)	0.0	0.0	0.0	1.6
(C)	5.5	5.5	5.5	0.1
Q305(B)	0.0	5.5	5.5	0.0
(C)	0.0	0.0	0.0	1.6

A BOARD * MARK

Ref	A2941A	A2941B	A2941D	A2943E	A2941K	A2942U
C244	1MF	1MF	1MF	1MF	1MF	0.01MF
C299	2.2MF	1MF	2.2MF	2.2MF	2.2MF	2.2MF
C333	-	470PF	-	-	-	-
D215	-	DAN204K	-	-	-	-
D216	-	DAN204K	-	-	-	-
IC201	TDA6612	TDA6612	TDA6612	TDA6612	TDA6612	TDA6622
IFB101	IFH-389	IFH-389F	IFH-389	IFH-389	IFH-389	IFH-395
R293	-	12K	-	-	-	-
R296	-	330	-	-	-	-
R297	-	120	-	-	-	-
R326	-	0	-	-	-	-
TU101	UV916H	UV916H	UV916H	UV916H	UV916H	U944C

A BOARD IC304 CXA1587S

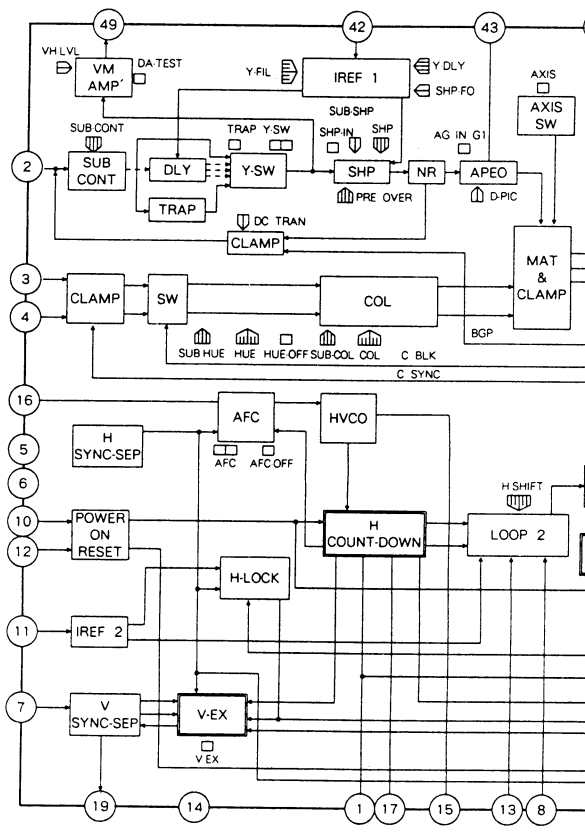

A BOARD IC251/261 TDA2052

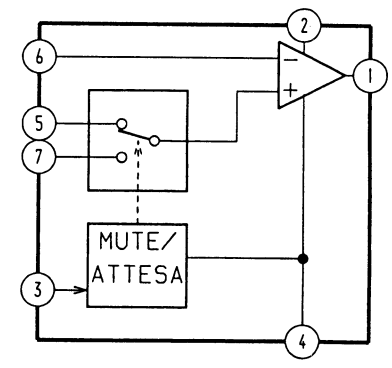

RMS A BOARD

L -p (H)	① SECAM 1.2 Vp-p (H)	① NTSC 1.4 Vp-p (H)	② PAL 1.9 Vp-p (H)	② SECAM 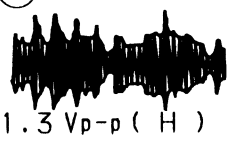 1.3 Vp-p (H)
SC -p (H)	③ PAL 2.3 Vp-p (H)	③ SECAM 2.2 Vp-p (H)	③ NTSC 2.7 Vp-p (H)	④ PAL 2.3 Vp-p (H)
CAM -p (H)	④ NTSC 2.8 Vp-p (H)	⑤ PAL 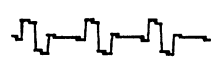 0.6 Vp-p (H)	⑤ SECAM 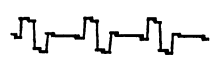 1.2 Vp-p (H)	⑤ NTSC 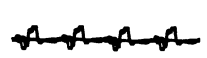 0.5 Vp-p (H)
L 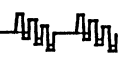 -p (H)	⑥ SECAM 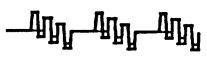 1.5 Vp-p (H)	⑥ NTSC 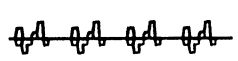 0.7 Vp-p (H)	⑦ PAL, SECAM 0.5 Vp-p (H)	⑦ NTSC 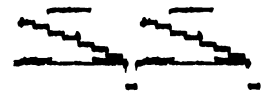 0.6 Vp-p (H)
L -p (H)	⑧ SECAM 0.4 Vp-p (H)	⑧ NTSC 0.6 Vp-p (H)	⑨ PAL, SECAM 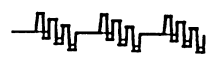 1.5 Vp-p (H)	⑨ NTSC 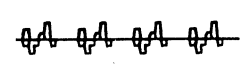 1.5 Vp-p (H)
AL, SECAM 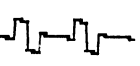 -p (H)	⑩ NTSC 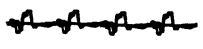 1.0 Vp-p (H)	⑪ 5.2 Vp-p (H)	⑫ 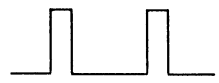 6.7 Vp-p (H)	⑬ 0.12 Vp-p(540KHZ)
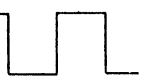 -p (H)	⑮ 3.8 Vp-p (H)	⑯ 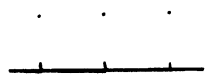 5.0 Vp-p (H)	⑰ 8.9 Vp-p (H)	⑱ 3.3 Vp-p (H)
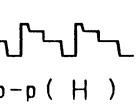 -p (H)	⑳ 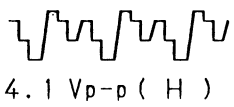 4.1 Vp-p (H)			

ndicated with the mark ※
ematic diagram are shown
e below.

D

PAL	SECAM	NTSC3.58	NTSC4.43
0.0	0.0	4.8	4.9
0.0	5.0	5.0	0.0
4.7	4.2	3.6	4.1
4.8	4.4	4.6	4.8
0.0	0.0	0.0	1.6
5.5	5.5	5.5	0.1
0.0	5.5	5.5	0.0
0.0	0.0	0.0	1.6

A2941B	A2941D	A2943E	A2941K	A2942U
1MF	1MF	1MF	1MF	0.01MF
1MF	2.2MF	2.2MF	2.2MF	2.2MF
470PF	-	-	-	-
DAN204K	-	-	-	-
DAN204K	-	-	-	-
TDA6612	TDA6612	TDA6612	TDA6612	TDA6622
IFH-389F	IFH-389	IFH-389	IFH-389	IFH-395
12K	-	-	-	-
330	-	-	-	-
120	-	-	-	-
0	-	-	-	-
UV916H	UV916H	UV916H	UV916H	U944C

A BOARD IC201 TDA6622 (UK Model only)

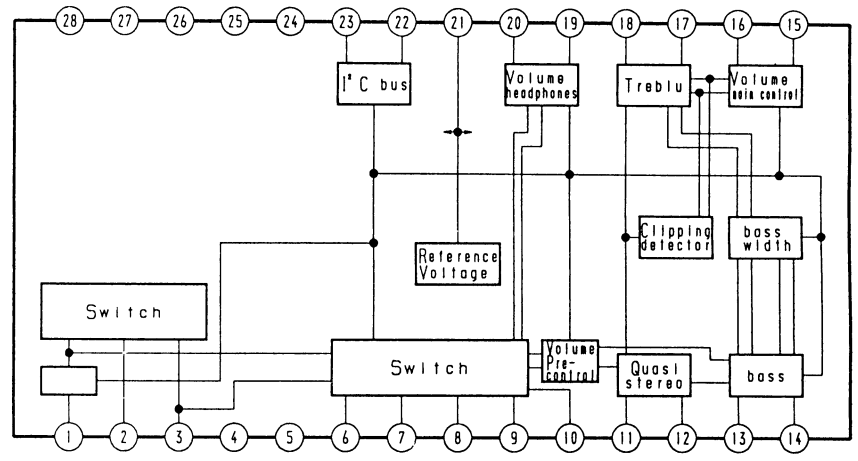

A BOARD IC201 TDA6612

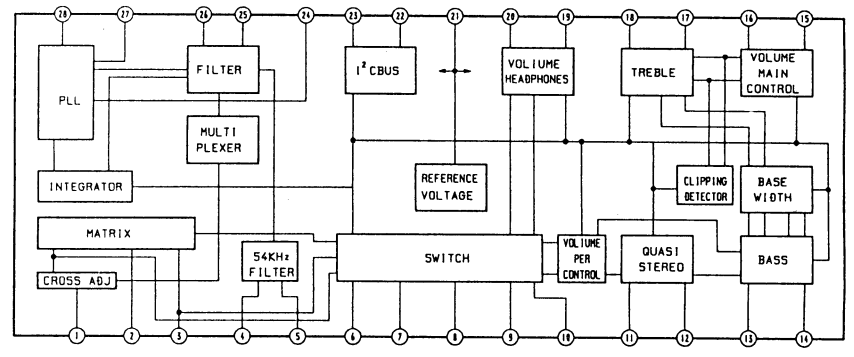

A BOARD IC301 TDA9145/N2B

A BOARD IC304 CXA1587S

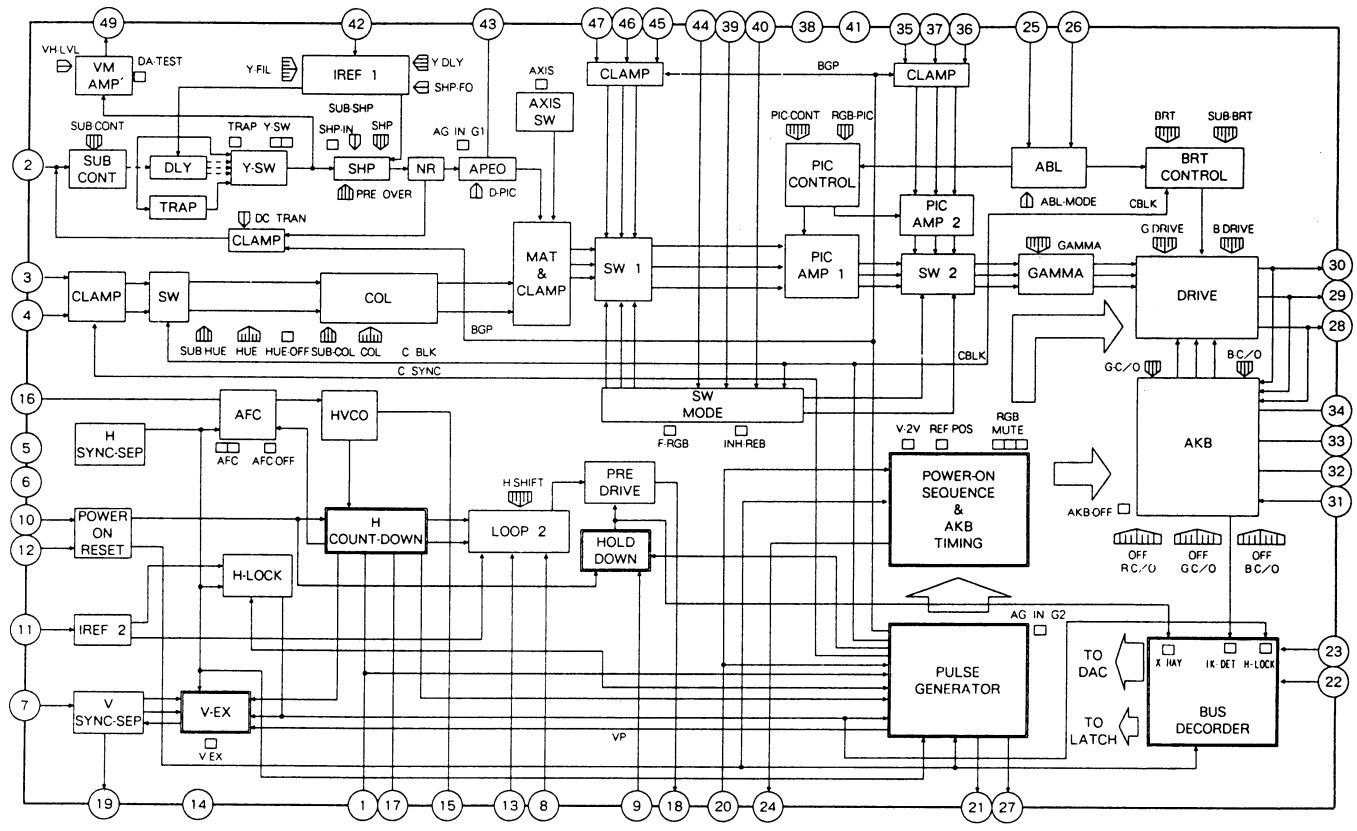

A BOARD IC251/261 TDA2052

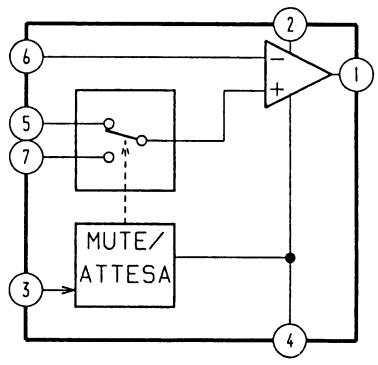

A BOARD IC402 TEA2114

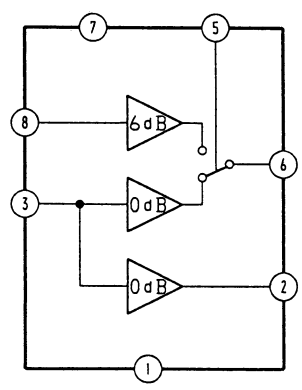

A BOARD IC681 TDA8138A

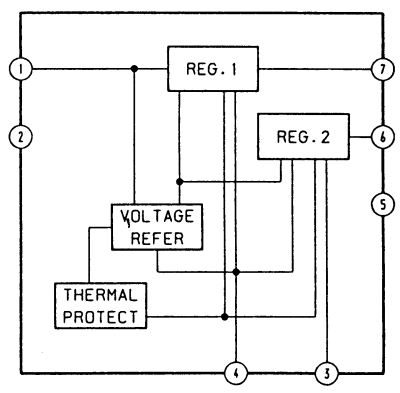

M2 BOARD IC561 CXD2018Q

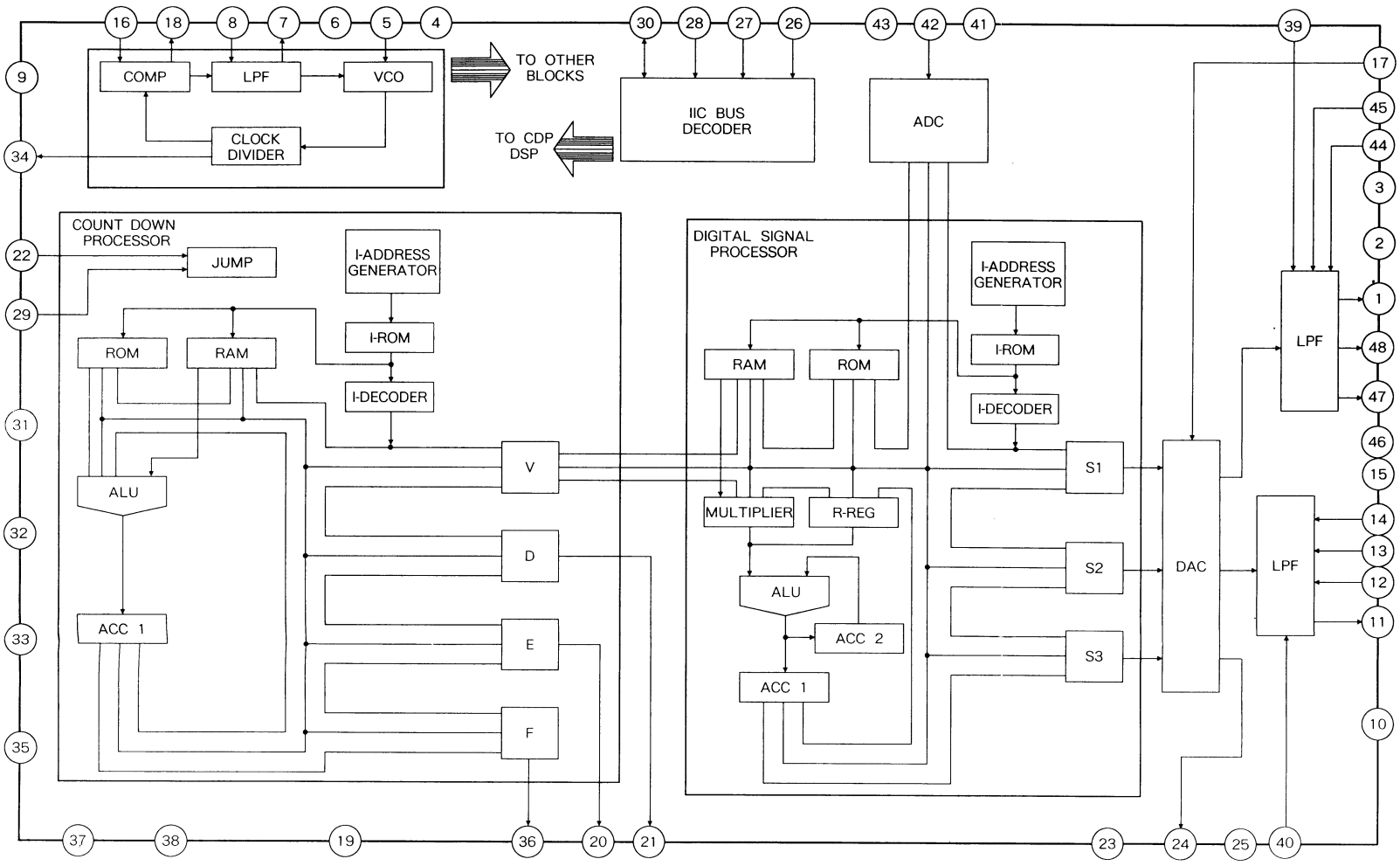

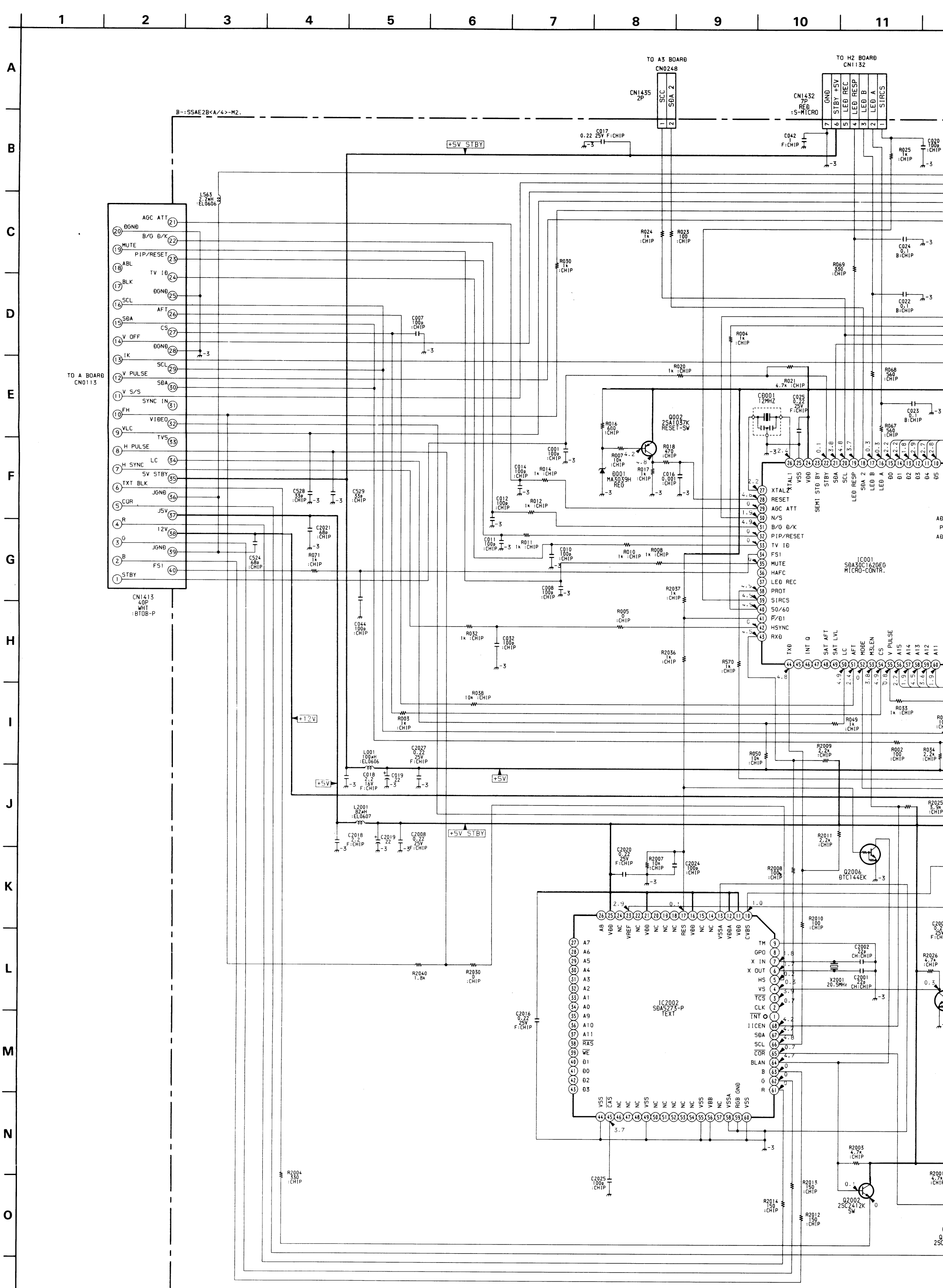
TO A3 BOARD
CN0248
CN1435
2P
SCC
SDA 2
TO H2 BOARD
CN1132
CN1432
7P
RED
:S-MICRO
GND
STBY +5V
LED REC
LED RESP
LED B
LED A
SIRCS
B~:SSAE2B<A/4>-M2.
+5V STBY
C017
0.22 25V F:CHIP
C042
1
F:CHIP
C020
100p
:CHIP
R025
1k
:CHIP
L563
2.2mH
:EL0606
AGC ATT
DGND
B/G D/K
MUTE
PIP/RESET
ABL
TV ID
BLK
DGND
SCL
AFT
SDA
CS
V OFF
DGND
IK
SCL
V PULSE
SDA
V S/S
SYNC IN
FH
VIDEO
VLC
TVS
H PULSE
LC
H SYNC
5V STBY
TXT BLK
JGND
CUR
J5V
R
12V
G
JGND
B
FSI
STBY
TO A BOARD
CN0113
CN1413
40P
WHT
:BTOB-P
R024
1k
:CHIP
R023
100
:CHIP
C024
0.1
B:CHIP
R030
1k
:CHIP
R069
330
:CHIP
C022
0.1
B:CHIP
C007
100p
:CHIP
R004
1k
:CHIP
R020
1k :CHIP
R021
4.7k :CHIP
R068
560
:CHIP
C0001
12MHZ
C025
0.22
25V
F:CHIP
C023
0.1
B:CHIP
R016
680
:CHIP
Q002
2SA1037K
RESET-SW
R067
560
:CHIP
C001
100p
:CHIP
R007
10k
:CHIP
R018
470
:CHIP
C014
100p
:CHIP
R014
1k :CHIP
D001
MA3039H
REG
R017
1k
:CHIP
C016
0.001
:CHIP
C012
100p
:CHIP
R012
1k :CHIP
C528
33p
:CHIP
C529
33p
:CHIP
C2021
68p
:CHIP
C524
68p
:CHIP
R071
1k
:CHIP
C011
100p
:CHIP
R011
1k :CHIP
C010
100p
:CHIP
R010
1k :CHIP
R008
1k :CHIP
C008
100p
:CHIP
C044
100p
:CHIP
R2037
1k
:CHIP
R005
0
:CHIP
R032
1k :CHIP
C032
100p
:CHIP
R2036
1k
:CHIP
R570
1k
:CHIP
R038
10k :CHIP
R003
1k
:CHIP
+12V
L001
100mH
:EL0606
C2027
0.22
25V
F:CHIP
C018
2.2
16V
F:CHIP
C019
22
+5V
+5V
+5V
L2001
82mH
:EL0607
C2018
2.2
F:CHIP
C2019
22
C2008
0.22
25V
F:CHIP
+5V STBY
R2040
1.8k
R2030
0
:CHIP
IC001
SDA3DC162GEG
MICRO-CONTR.
XTAL1
VSS
VDD
STBY
SDA
SCL
LED RESP
SDA 2
LED B
LED A
D0
D1
D2
D3
D4
D5
XTAL2
RESET
AGC ATT
N/S
B/G D/K
PIP/RESET
TV ID
FSI
MUTE
HAFC
LED REC
PROT
SIRCS
50/60
F/D1
HSYNC
RXD
TXD
INT Q
SAT AFT
SAT LVL
LC
AFT
MODE
M3LEN
CS
V PULSE
A15
A14
A13
A12
A11
R033
1k :CHIP
R049
1k
:CHIP
R050
10k
:CHIP
R2009
2.2k
:CHIP
R002
100
:CHIP
R034
2.2k
:CHIP
R2025
5.9k
:CHIP
C2020
0.22
25V
F:CHIP
R2007
10k
:CHIP
C2024
100p
:CHIP
R2008
100
:CHIP
R2011
2.2k
:CHIP
Q2006
DTC144EK
R2010
100
:CHIP
C2002
22p
CH:CHIP
X2001
20.5MHz
C2001
22p
CH:CHIP
R2026
4.7k
:CHIP
C2016
0.22
25V
F:CHIP
IC2002
SDA5273-P
TEXT
A8
VDD
NC
VREF
VSSA
VDDA
CVBS
A7
A6
A5
A4
A3
A2
A1
A0
A9
A10
A11
RAS
WE
D1
D0
D2
D3
TM
GPO
X IN
X OUT
HS
VS
TCS
CLK
INT
IICEN
SDA
SCL
COR
BLAN
B
G
R
VSS
CAS
VBB
RGB GND
C2025
100p
:CHIP
R2003
4.7k
:CHIP
R2004
330
:CHIP
R2013
150
:CHIP
R2014
150
:CHIP
R2012
150
:CHIP
Q2002
2SC2412K
5W

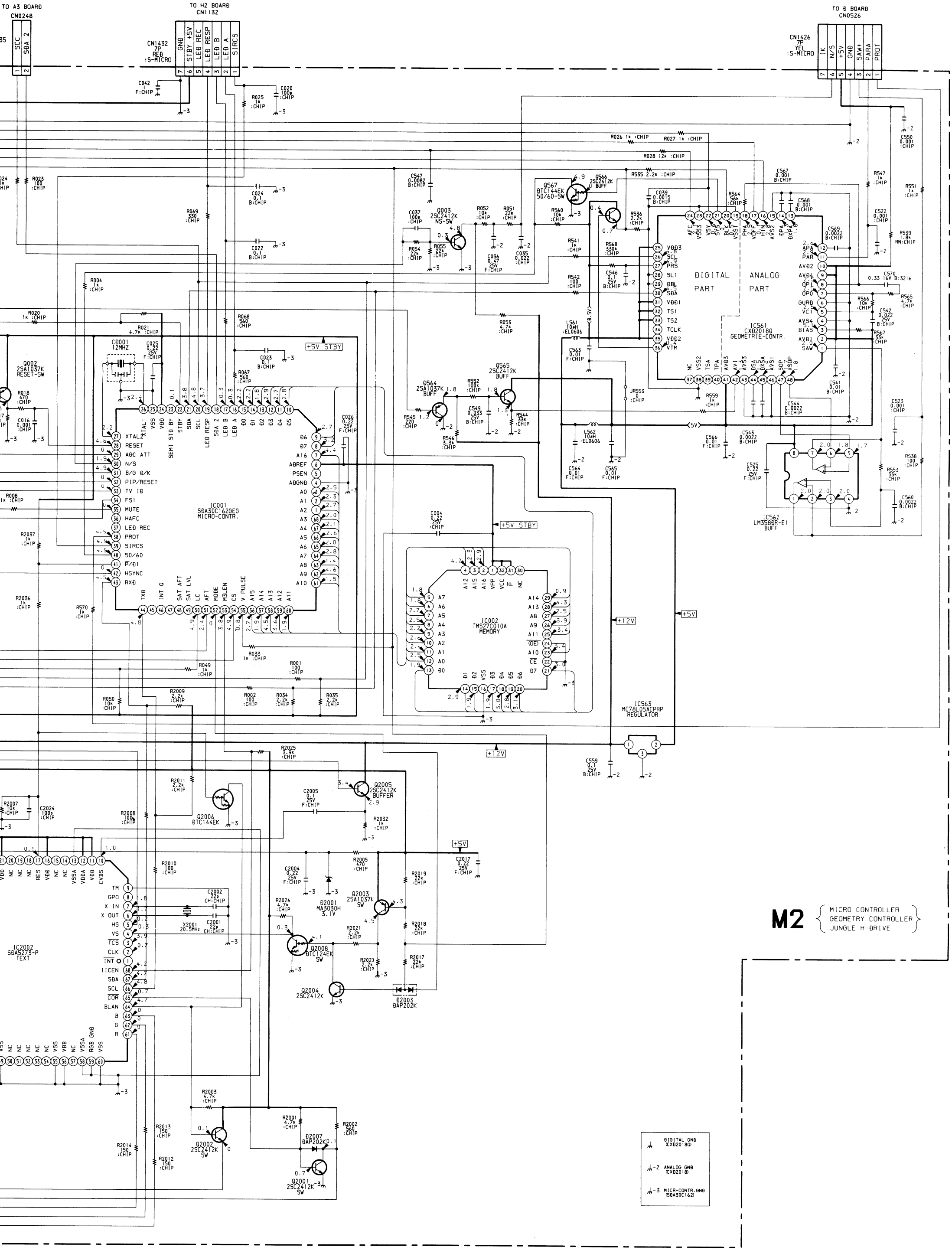

M2 { MICRO CONTROLLER / GEOMETRY CONTROLLER / JUNGLE H-DRIVE }

M2 [MICRO CONTROLLER, GEOMETRY CONTROLLER, JUNGLE, H – DRIVE] **D** [H/V OUT, PIN OUT, POWER SUPPLY]

– M2 BOARD –

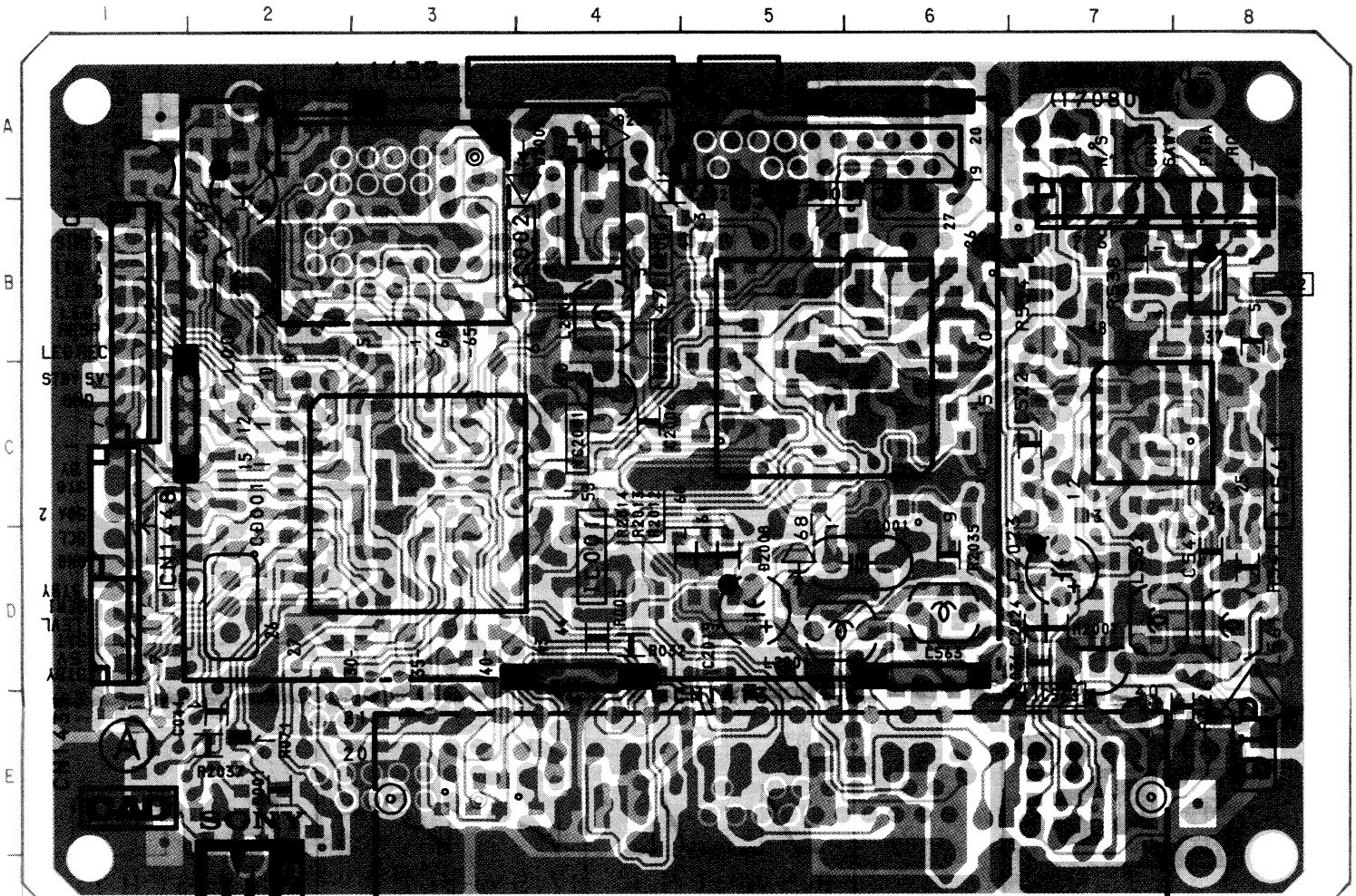

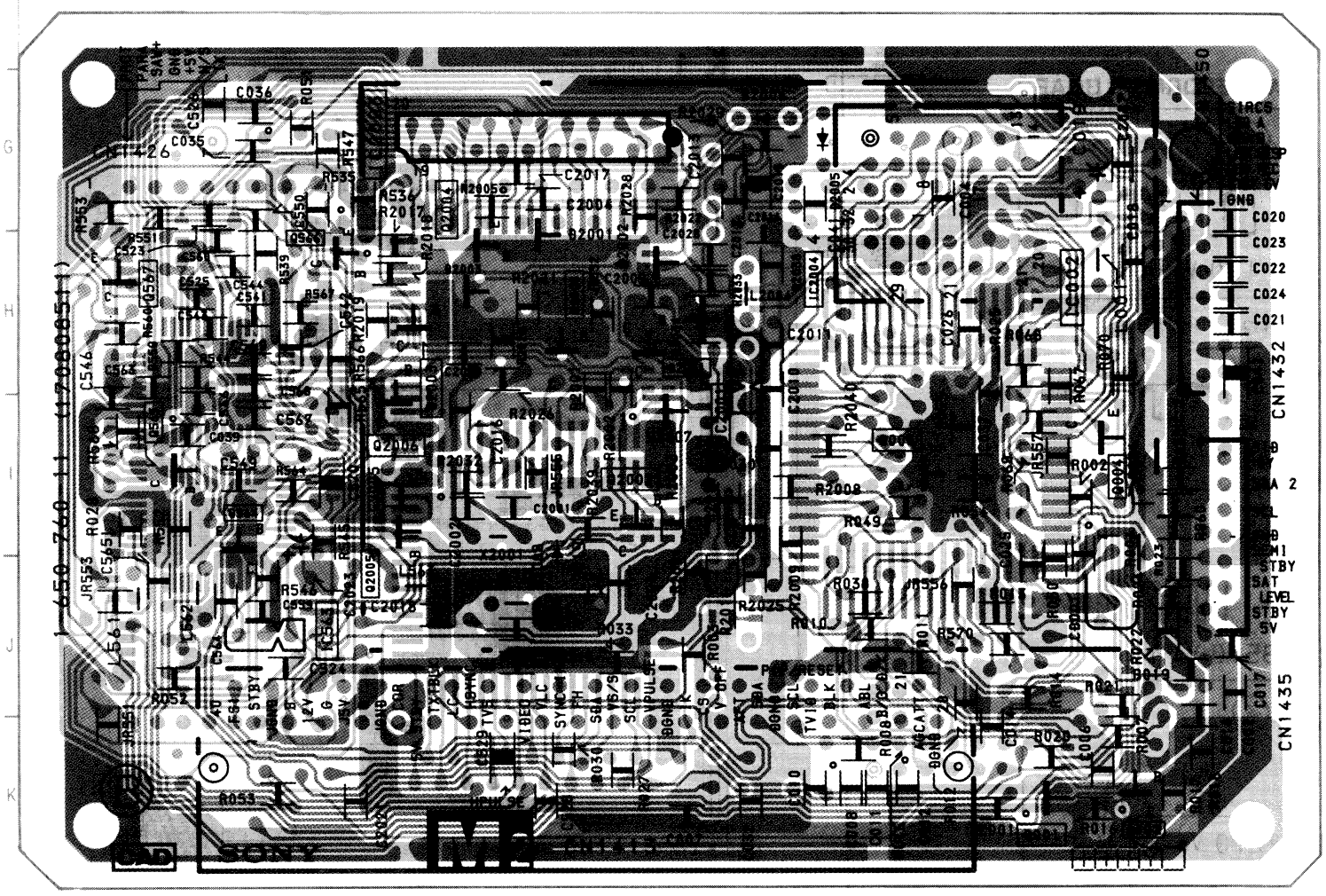

Note :

- : Pattern from the side which enables seeing.
- : Pattern of the rear side.

IC	
IC001	C - 4
IC002	B - 3, H - 7
IC561	C - 8
IC562	B - 8
IC563	D - 7, J - 3
IC2001	C - 4, I - 5
IC2002	C- 5
IC2003	B - 5, G - 3
IC2004	B - 4, H - 5

TRANSISTOR	
Q002	K - 7
Q003	I - 6
Q564	I - 2
Q565	I - 1
Q566	G - 2
Q567	H - 1
Q2001	H - 5
Q2002	I - 4
Q2003	H - 3
Q2005	J - 3
Q2006	I - 3
Q2008	H - 4

DIODE	
D001	K - 7
D2001	G - 4
D2002	H - 4
D2003	H - 3

WAVEFORMS D BOARD

① 220 Vp-p (H)	② 2.8 Vp-p (V)	③ 0.5 Vp-p (V)
④ 60.0 Vp-p (V)	⑤ 3.0 Vp-p (H)	⑥ 175 Vp-p (H)
⑦ 150 Vp-p (H)	⑧ 950 Vp-p (H)	⑨ 19.0 Vp-p (H)

IC

IC001	C - 4
IC002	B - 3, H - 7
IC561	C - 8
IC562	B - 8
IC563	D - 7, J - 3
IC2001	C - 4, I - 5
IC2002	C- 5
IC2003	B - 5, G - 3
IC2004	B - 4, H - 5

TRANSISTOR

Q002	K - 7
Q003	I - 6
Q564	I - 2
Q565	I - 1
Q566	G - 2
Q567	H - 1
Q2001	H - 5
Q2002	I - 4
Q2003	H - 3
Q2005	J - 3
Q2006	I - 3
Q2008	H - 4

DIODE

D001	K - 7
D2001	G - 4
D2002	H - 4
D2003	H - 3

③

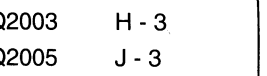

0.5 Vp-p (V)

⑥

175 Vp-p (H)

⑨

9.0 Vp-p (H)

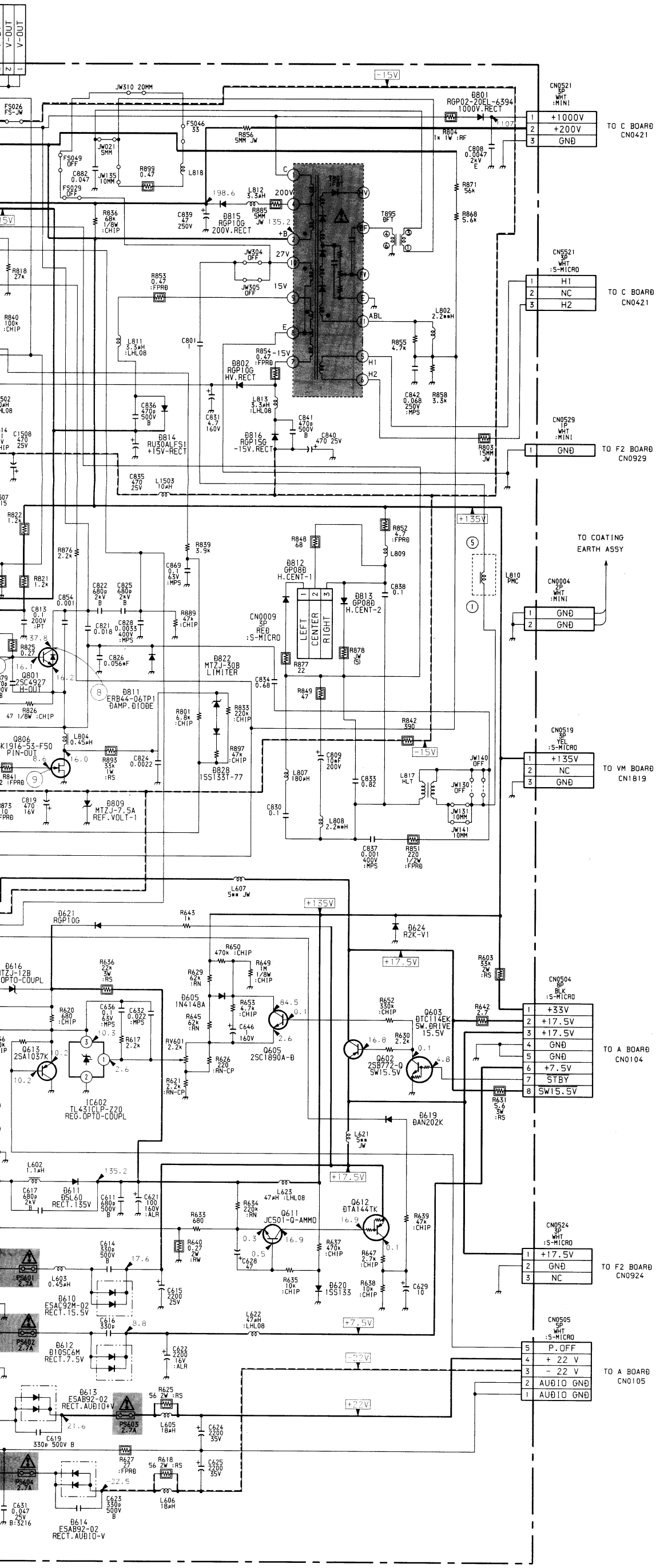
-15V
JW310 20MM
D801 RGP02-20EL-6394 1000V.RECT
CN0521 3P WHT :MINI
1 +1000V
2 +200V
3 GND
TO C BOARD CN0421
FS026 FS-JW
FS046 33
R856 5MM JW
R804 1k 1W :RF
FS049 OFF
JW021 5MM
C882 0.047
JW135 10MM
FS029 OFF
R899 0.47
L818
C808 0.0047 2kV E
R871 56k
R868 5.6k
T801 FBT
T895 DFT
198.6
L812 3.3uH
200V
R885 5MM JW
135.2
D815 RGP10G 200V.RECT
C839 47 250V
R836 68k 1/2W :CHIP
+B
JW304 OFF
27V
R853 0.47 :FPRB
JW305 OFF
15V
R818 27k
R840 100k :CHIP
ABL
L802 2.2mH
L811 5.3uH :LHL08
C801 1
R854 -15V 0.47 :FPRB
R855 4.7k
H1
H2
D802 RGP10G HV.RECT
C842 0.068 250V :MPS
R858 3.5k
CN5521 5P WHT :S-MICRO
1 H1
2 NC
3 H2
TO C BOARD CN0421
C836 470p 500V B
C831 4.7 160V
D814 RU3ALFS1 +15V-RECT
D816 RGP15G -15V.RECT
C841 470p 500V B
C840 470 25V
R803 15MM JW
CN0529 1P WHT :MINI
1 GND
TO F2 BOARD CN0929
C835 470 25V
L1503 10uH
+135V
TO COATING EARTH ASSY
R822 1.2k
R852 4.7 :FPRB
R848 68
L809
R839 3.9k
D812 GP08D H.CENT-1
D813 GP08D H.CENT-2
C869 0.1 63V :MPS
C838 0.1
L810 PMC
CN0004 2P WHT :MINI
1 GND
2 GND
R876 2.2k
R821 1.2k
C854 0.001
C822 680p 2kV B
C825 680p 2kV B
C821 0.018
C828 0.0033 400V :MPS
R889 47k :CHIP
CN0009 3P RED :S-MICRO
LEFT
CENTER
RIGHT
C813 0.1 200V :PT
37.8
R825 0.27
C826 0.056mF
D822 MTZJ-30B LIMITER
R877 22
R878 JW (5)
C834 0.68
R849 47
Q801 2SC4927 H-OUT
16.1
16.2
D811 ERB44-06TP1 DAMP.DIODE
R826 47 1/2W :CHIP
R842 390
-15V
CN0519 3P YEL :S-MICRO
1 +135V
2 NC
3 GND
TO VM BOARD CN1819
R801 6.8k :CHIP
R833 220k :CHIP
R897 47k :CHIP
Q806 K1916-53-F50 PIN-OUT
L804 0.45uH
R893 55k 1W :RS
C824 0.0022
D828 1SS133T-77
JW140 OFF
L817 HLT
JW130 OFF
JW131 10MM
JW141 10MM
C809 10mF 200V
L807 180uH
C833 0.82
C830 0.1
L808 2.2mH
C837 0.001 400V :MPS
R851 220 1/2W :FPRB
C819 470 16V
D809 MTZJ-7.5A REF.VOLT-1
L607 5mm JW
+135V
D621 RGP10G
R643 1k
D624 R2K-V1
+17.5V
R650 470k :CHIP
R636 22k 5W :RS
R649 1M 1/8W :CHIP
R629 62k :RN
R603 55k 2W :RS
CN0504 8P BLK :S-MICRO
1 +33V
2 +17.5V
3 +17.5V
4 GND
5 GND
6 +7.5V
7 STBY
8 SW15.5V
TO A BOARD CN0104
D616 MTZJ-12B OPTO-COUPL
R620 680 :CHIP
C636 0.1 63V :MPS
C632 0.022 :MPS
D605 1N4148A
R645 62k :RN
R653 4.7k :CHIP
C646 1 160V
R652 330k :CHIP
Q603 DTC114EK SW.DRIVE 15.5V
R642 2.7
R630 2.2k
Q602 2SB772-Q SW15.5V
R631 5.6 5W :RS
Q613 2SA1037K
R617 2.2k
RV601 2.2k
R626 220 :RN-CP
Q605 2SC1890A-D
R621 2.2k :RN-CP
IC602 TL431CLP-Z20 REG.OPTO-COUPL
D619 DAN202K
L621 5mm JW
L602 1.1uH
135.2
C617 680p 2kV B
D611 D5L60 RECT.135V
C611 680p 500V B
C621 100 160V :ALR
L623 47uH :LHL08
Q612 DTA144TK
R633 680
R634 220k :RN
Q611 JC501-Q-AMMO
R639 47k :CHIP
R640 0.27 2W :RW
C628 47
R637 470k :CHIP
R647 2.7k :CHIP
CN0524 3P WHT :S-MICRO
1 +17.5V
2 GND
3 NC
TO F2 BOARD CN0924
C614 330p 500V B
C615 2200 25V
R635 10k :CHIP
D620 1SS133
R638 10k :CHIP
C629 10
C616 330p
L622 47uH :LHL08
+7.5V
CN0505 5P WHT :S-MICRO
5 P.OFF
4 + 22 V
3 - 22 V
2 AUDIO GND
1 AUDIO GND
TO A BOARD CN0105
-22V
+22V
D613 ESAB92-02 RECT.AUDIO+V
R625 56 2W :RS
L605 18uH
C624 2200 35V
C619 330p 500V B
R627 27 :FPRB
R618 56 2W :RS
C625 2200 35V
C623 330p 500V B
L606 18uH
C631 0.047 25V B:3216
D614 ESAB92-02 RECT.AUDIO-V
D610 ESAC92M-02 RECT.15.5V
D612 D10SC6M RECT.7.5V
C622 2200 16V :ALR
C610 680p 2kV B
PS601 2.7A
PS602 2.7A
PS603 2.7A
PS604 2.7A

– D BOARD –

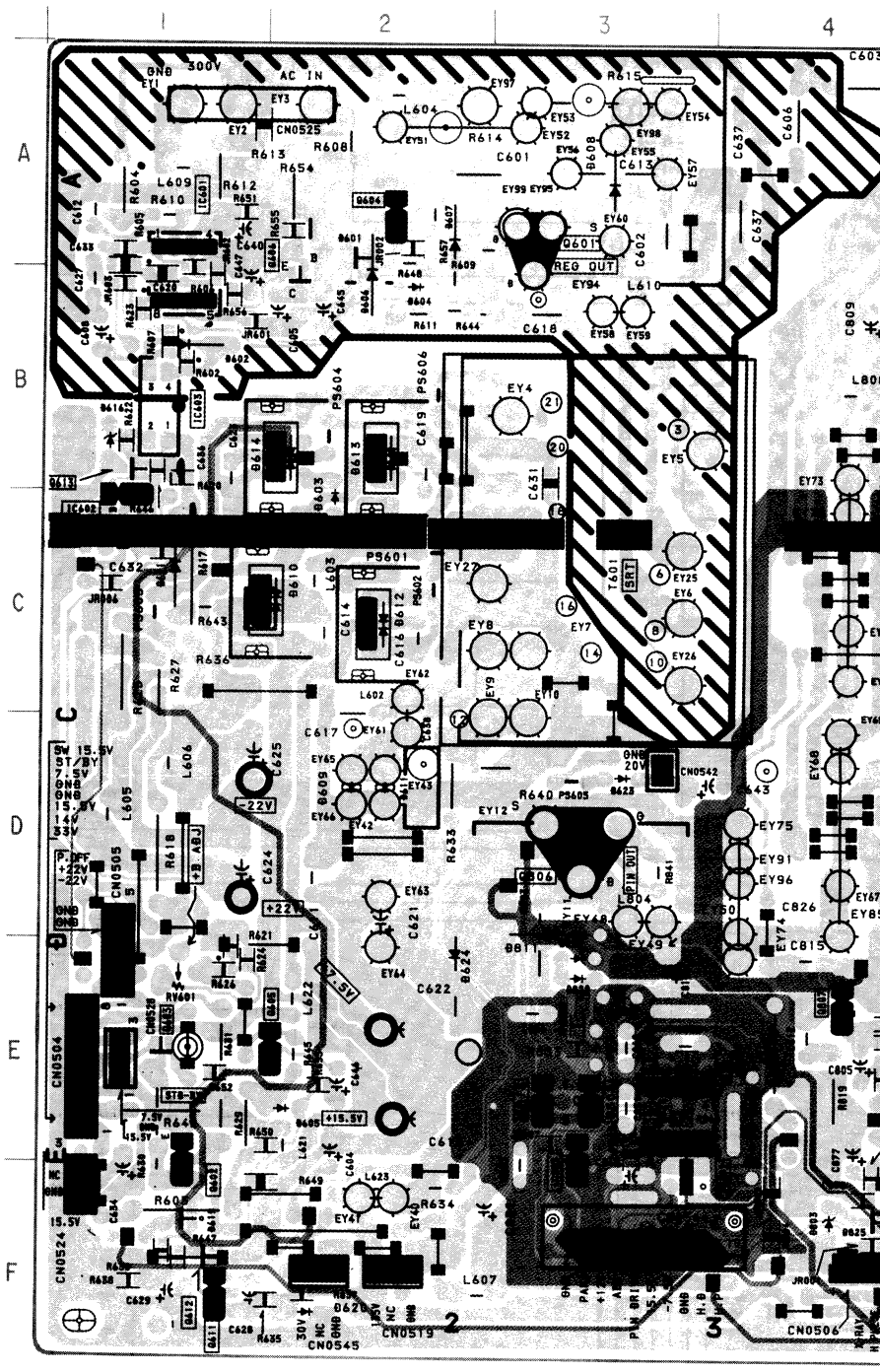
AC IN
CN0525
L604
R615
R614
R613
R654
R608
C601
C613
L609
R612
R610
REG OUT
L610
C618
EY4
EY5
EY73
C619
C631
C632
PS601
EY27
EY25
EY6
EY8
EY7
EY26
R643
R636
L602
EY42
EY9
EY10
EY61
EY65
EY43
EY66
EY42
EY12
EY75
EY91
EY96
EY67
EY85
EY74
C826
C815
EY63
EY64
C621
C622
EY48
EY49
R621
R624
L606
L605
C625
-22V
CN0505
CN0504
CN0524
CN0545
CN0519
CN0506
L607
C629
C628
R635
R634
R633
R637
R647
R639
R640
R641
R644
R645
R646
R649
R650
R652
R653
R654
R655
R656
R657
R658
R659
R660
R661
R662
R663
R664
R665
R666
R667
R668
R669
R670
R671
R672
R673
R674
R675
R676
R677
R678
R679
R680
R681
R682
R683
R684
R685
R686
R687
R688
R689
R690
R691

Note :

- : Pattern from the side which enables seeing.
- : Pattern of the rear side.

– D BOARD –

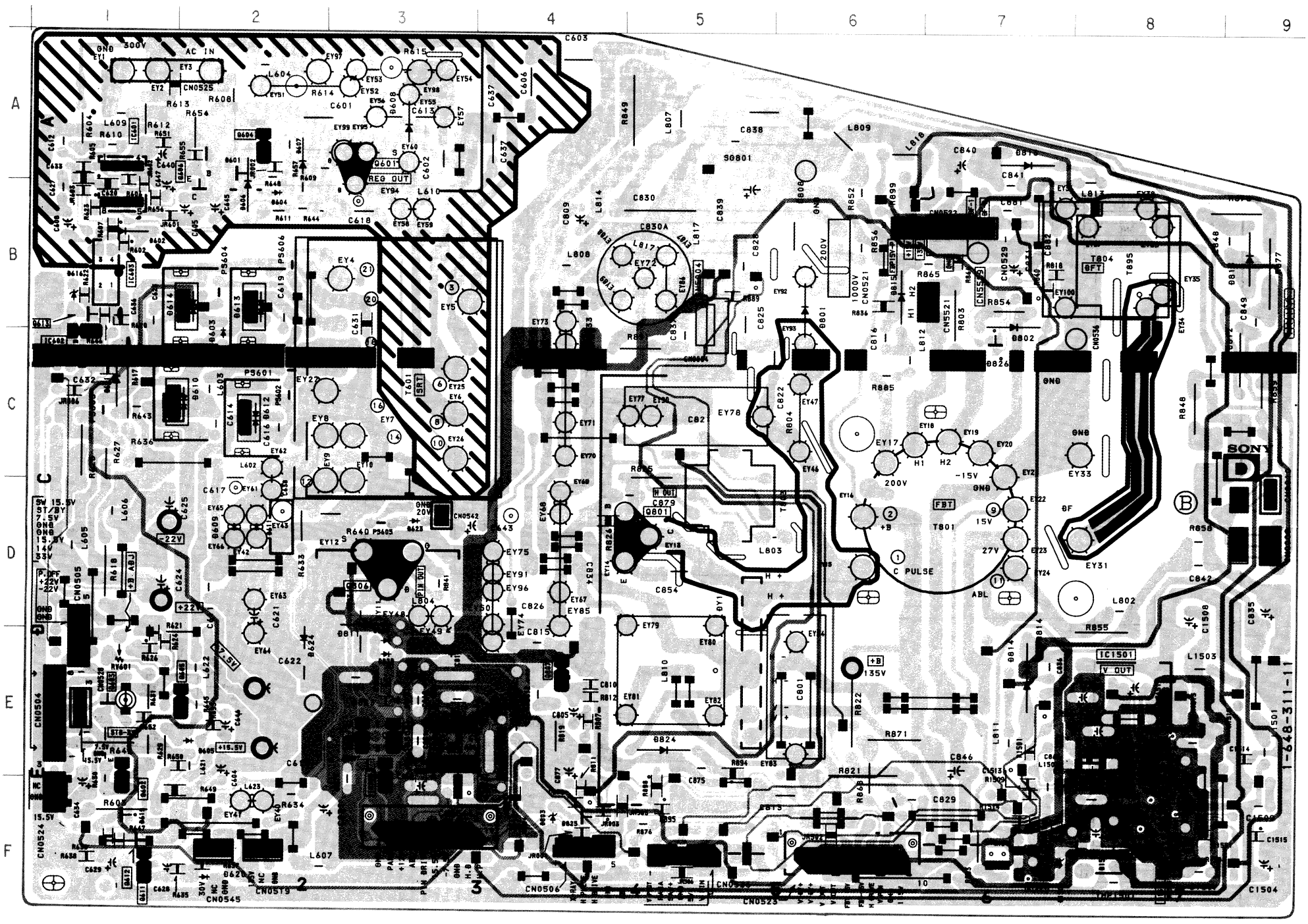

NOTE:
The circuit indicated as left contains high voltage of over 600 Vp-p. Care must be paid to prevent an electric shock in inspection or repairing.

IC	
IC601	A – 1
IC602	C – 1
IC603	B – 1
IC801	E – 3
IC803	F – 3
IC1501	E – 8

TRANSISTOR	
Q601	A – 3
Q602	F – 1
Q603	E – 1
Q604	A – 2
Q605	E – 2
Q606	B – 2
Q611	F – 1
Q612	F – 1
Q613	B – 1
Q801	D – 5
Q802	E – 3
Q806	D – 3
Q807	E – 4
Q813	E – 3
Q1501	F – 8
Q1502	F – 8
Q1503	F – 8
Q1504	F – 7

DIODE	
D601	A – 2
D602	B – 1
D604	B – 2
D605	E – 2
D606	B – 2
D607	A – 2
D608	A – 3
D610	C – 2
D611	D – 2
D612	C – 2
D613	B – 2
D614	B – 2
D616	B – 1
D619	F – 1
D620	F – 2
D621	C – 1
D624	E – 2
D801	B – 6
D802	B – 7
D803	F – 4
D809	E – 3
D811	D – 3
D812	C – 9
D813	B – 9
D814	E – 7
D815	B – 6
D816	A – 7
D822	E – 3
D824	E – 5
D825	F – 4
D826	C – 7
D828	E – 3
D1501	F – 8
D1503	F – 8
D1504	F – 7

VARIABLE RESISTOR	
RV601	E – 1

D BOARD IC601 TDA4605-3

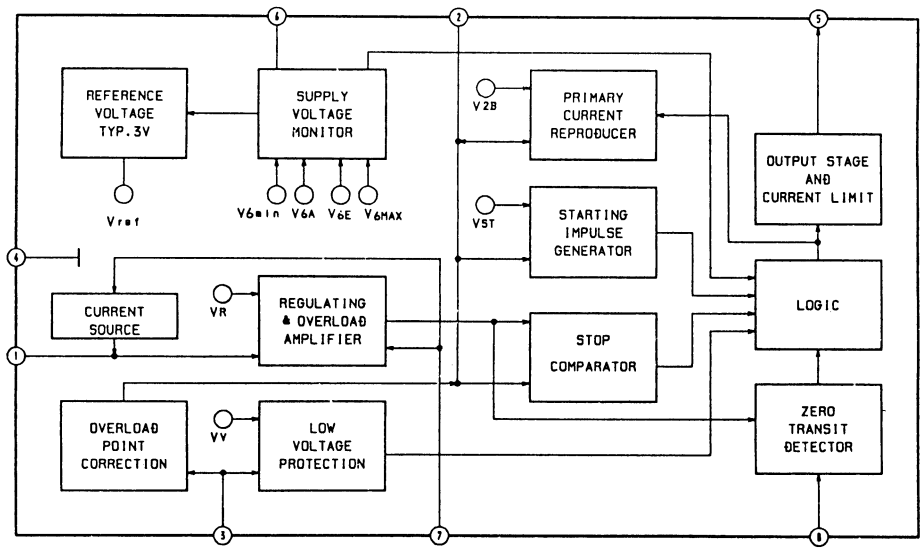

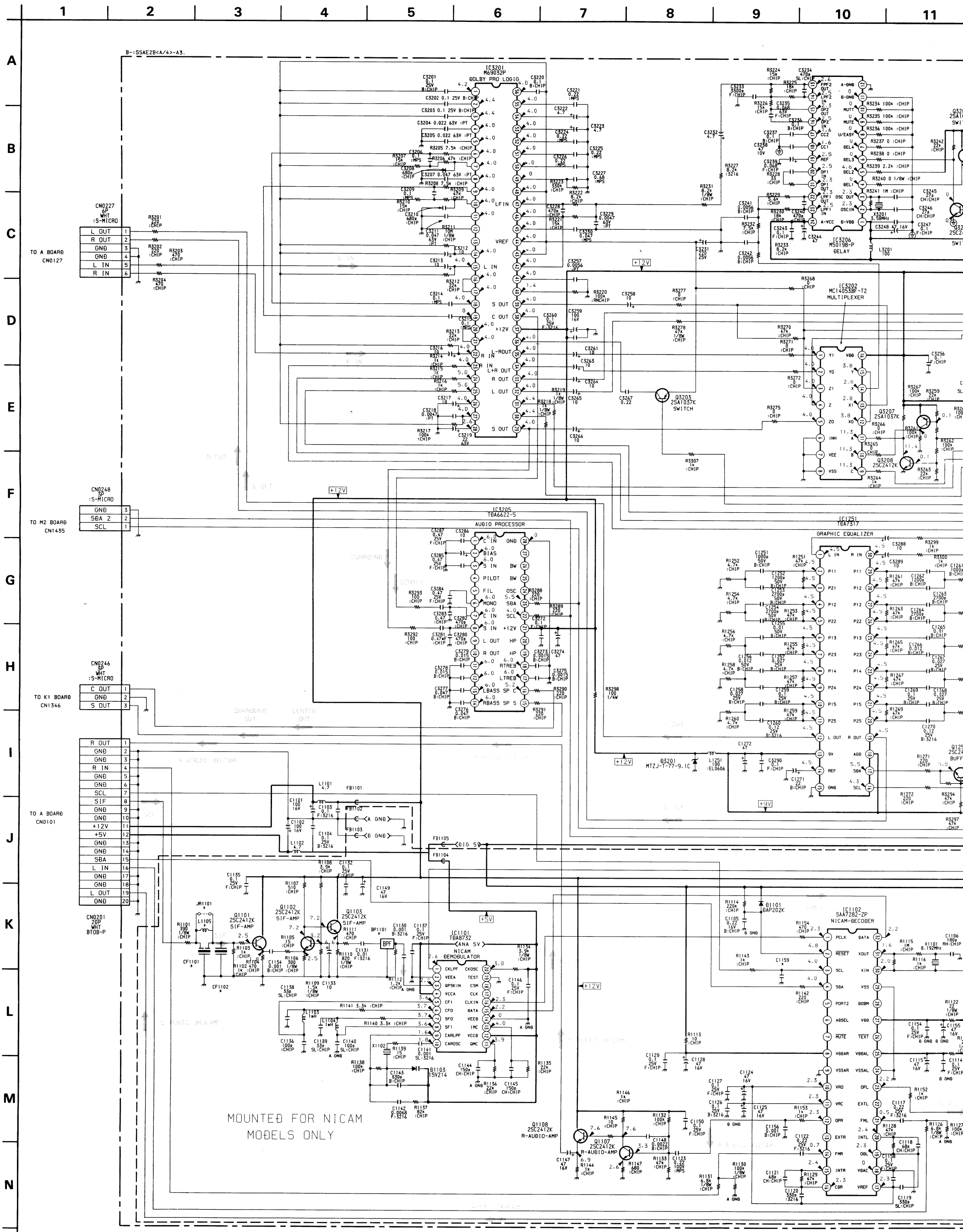
B-:SSAE2B<A/4>-A3.
IC3201
M69032P
DOLBY PRO LOGIC
IC3205
TDA6622-5
AUDIO PROCESSOR
IC3206
M50198-P
DELAY
IC3202
MC14053BF-T2
MULTIPLEXER
IC1251
TDA7317
GRAPHIC EQUALIZER
IC1101
TDA8732
NICAM DEMODULATOR
IC1102
SAA7282-ZP
NICAM-DECODER
Q3203
2SA1037K
SWITCH
Q3207
2SA1037K
Q3208
2SC2412K
Q1101
2SC2412K
SIF-AMP
Q1102
2SC2412K
SIF-AMP
Q1103
2SC2412K
SIF-AMP
Q1107
2SC2412K
R-AUDIO-AMP
Q1108
2SC2412K
R-AUDIO-AMP
D3201
MTZJ-T-77-9.1C
D1101
BAP202K
D1103
TSV214
CN0227
6P
WHT
:S-MICRO
L OUT
R OUT
GND
GND
L IN
R IN
TO A BOARD
CN0127
CN0248
3P
:S-MICRO
GND
SDA 2
SCL
TO M2 BOARD
CN1435
CN0246
3P
WHT
:S-MICRO
C OUT
GND
S OUT
TO K1 BOARD
CN1346
CN0201
20P
WHT
BTOB-P
R OUT
GND
GND
R IN
GND
GND
SCL
SIF
GND
GND
+12V
+5V
GND
GND
SDA
L IN
GND
GND
L OUT
GND
TO A BOARD
CN0101
+12V
+9V
+5V
A GND
D GND
MOUNTED FOR NICAM
MODELS ONLY

A3 { NICAM DECODER / NICAM DEMODULATOR / GRAPHIC EQUALIZER / DOLBY }

A3 BOARD * MARK

Model	KV-A2943E	KV-A2942U
BP1101	5.850MHz	6.552MHz
C1159	-	47P
CF1101	-	6.0MHz
CF1102	5.5MHz	-
JR1101	0 : CHIP	-
L1105	-	15MMh
X1102	11.700MHz	13.104MHz

A3 BOARD IC3201 M69032P

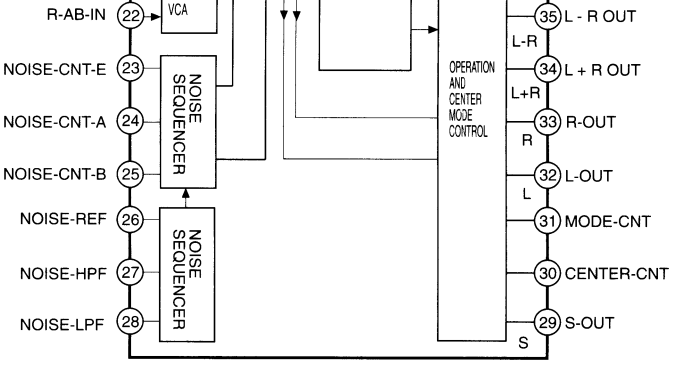

A3 BOARD IC3206 M50198P

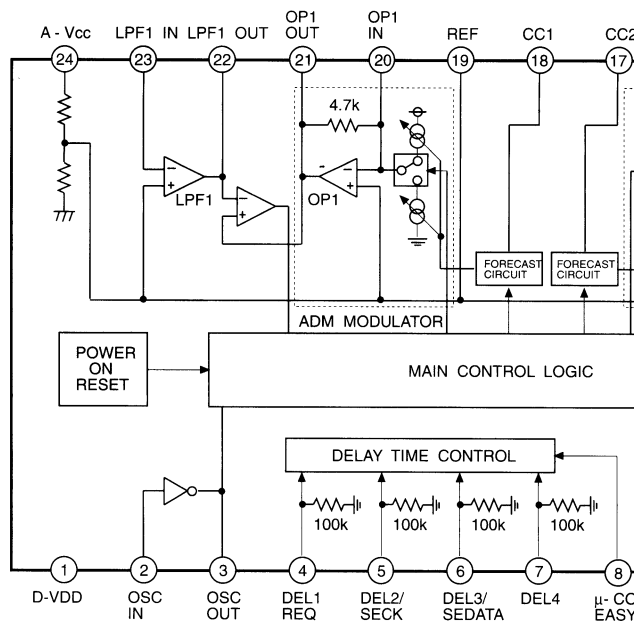

A3 BOARD * MARK

Model	KV-A2943E	KV-A2942U
BP1101	5.850MHz	6.552MHz
C1159	-	47P
CF1101	-	6.0MHz
CF1102	5.5MHz	-
JR1101	0 : CHIP	-
L1105	-	15MMh
X1102	11.700MHz	13.104MHz

A3 BOARD IC3201 M69032P

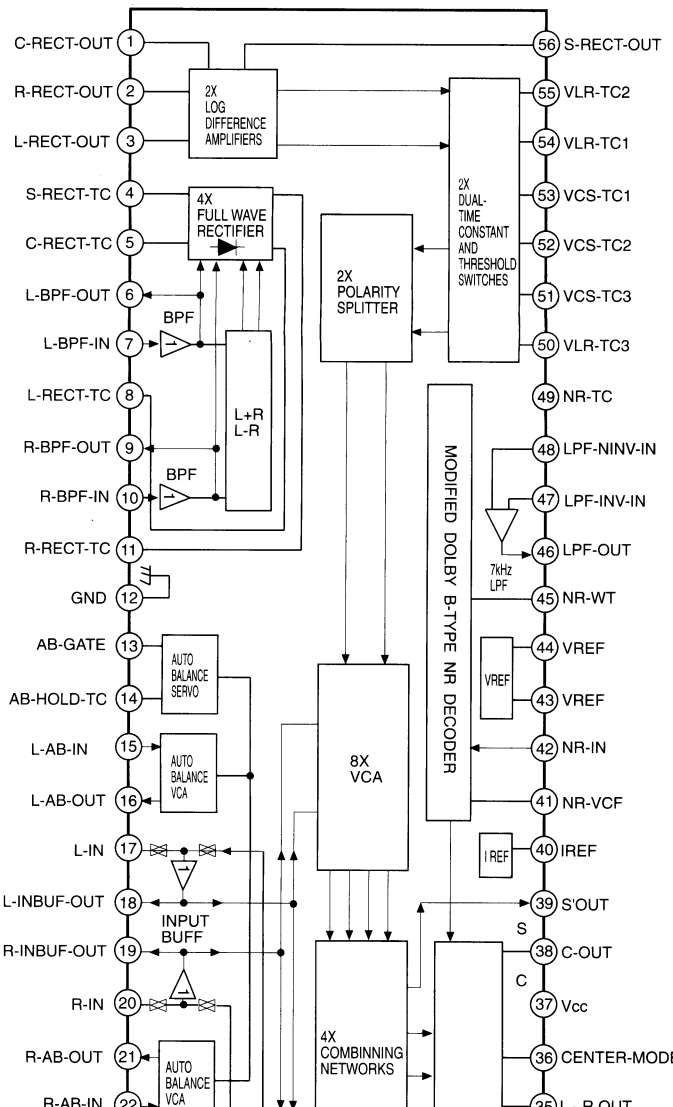

A3 BOARD IC1101 TDA8732

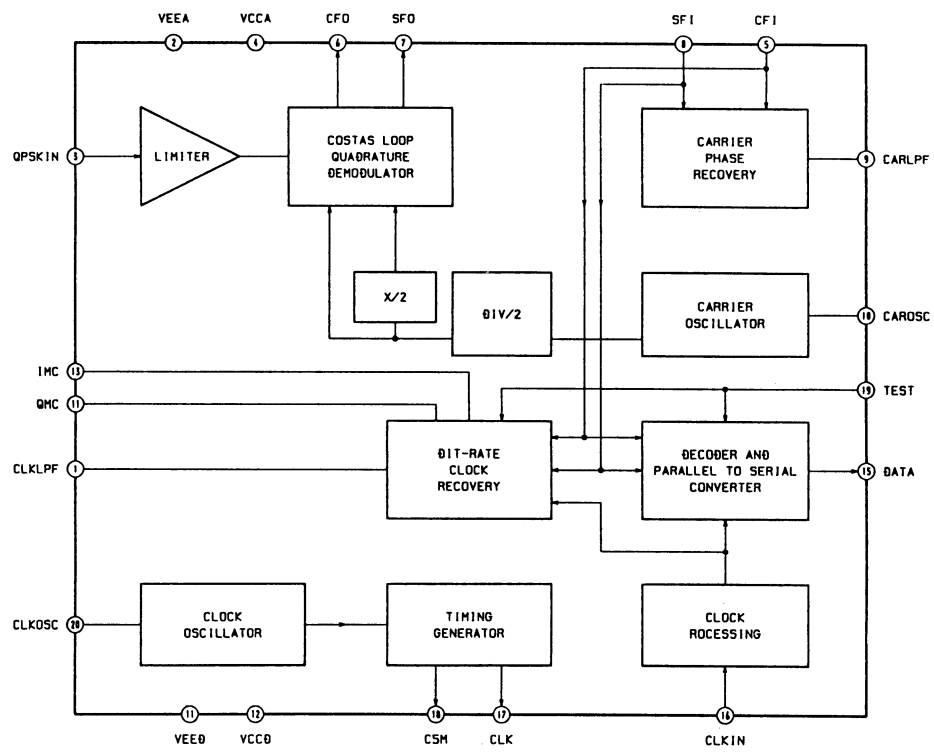

A3 BOARD IC3206 M50198P

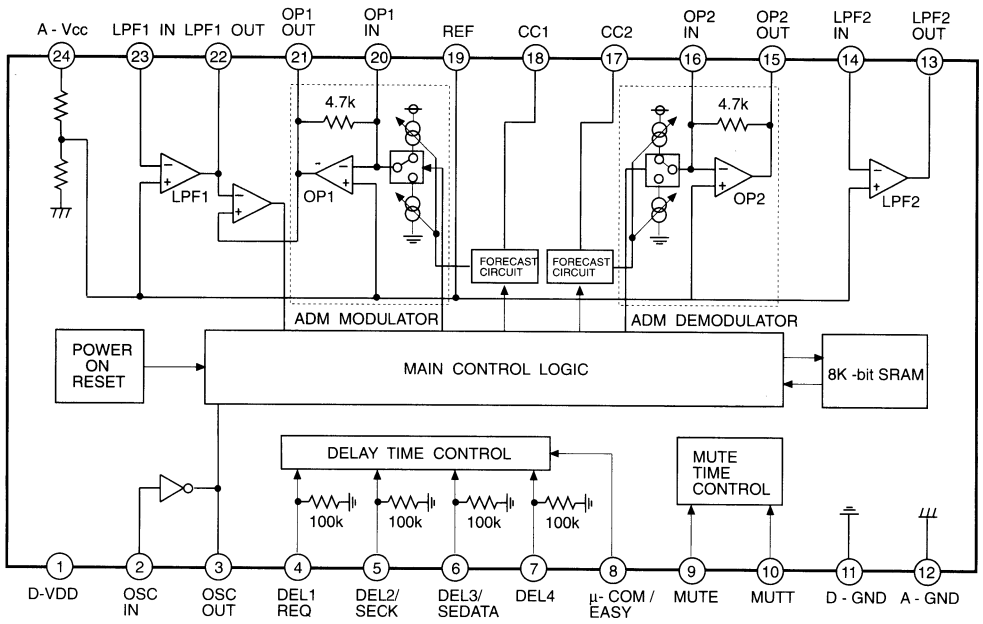

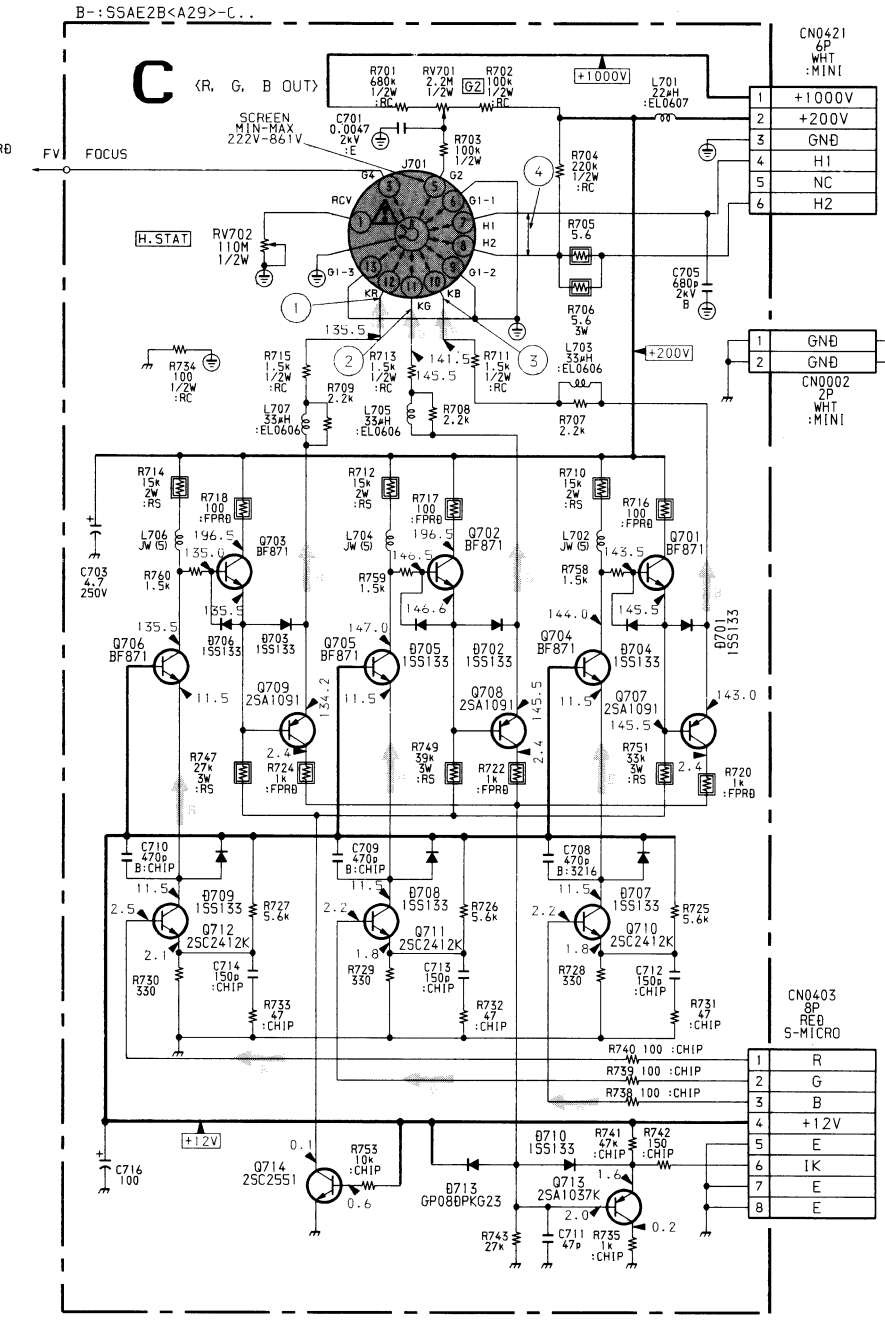

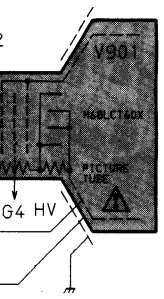

WAVEFORMS C BOARD

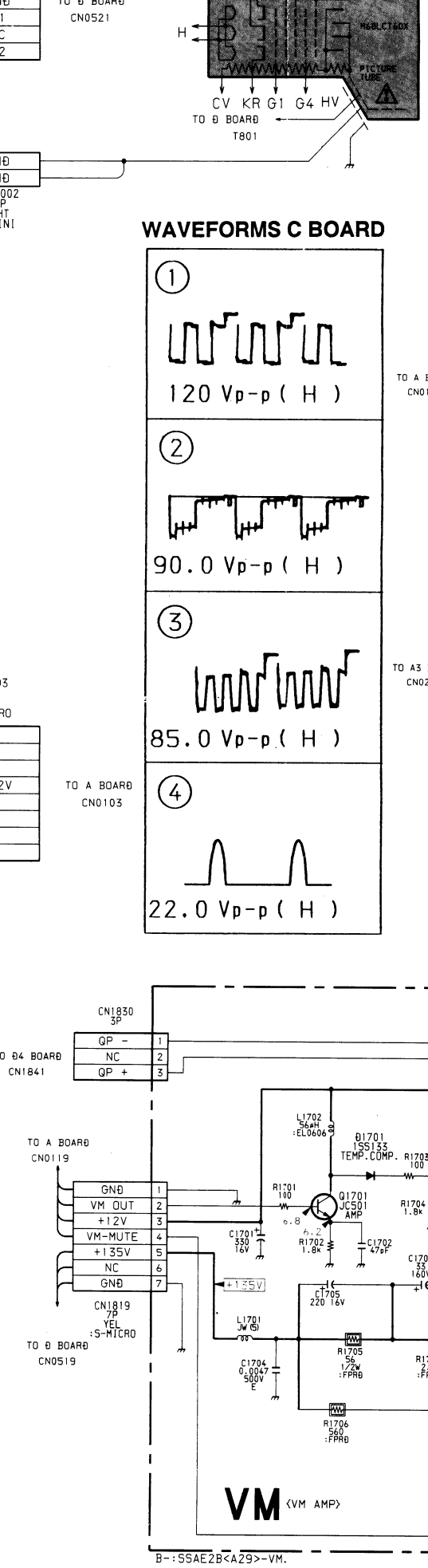

101 TDA8732

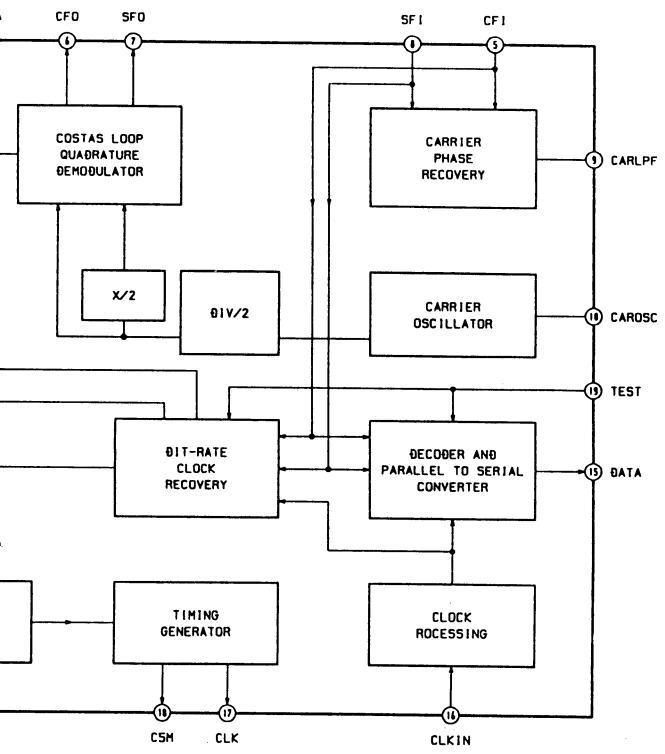

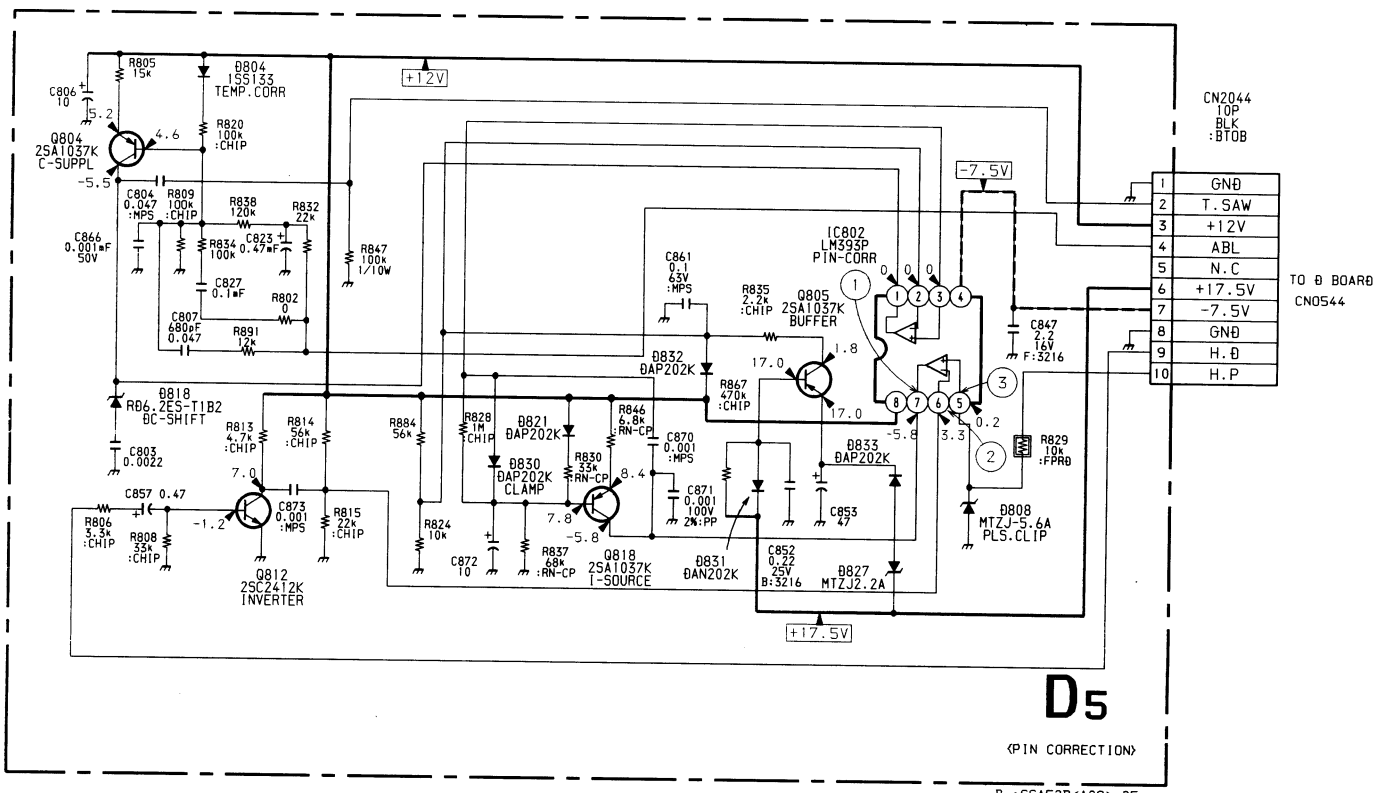

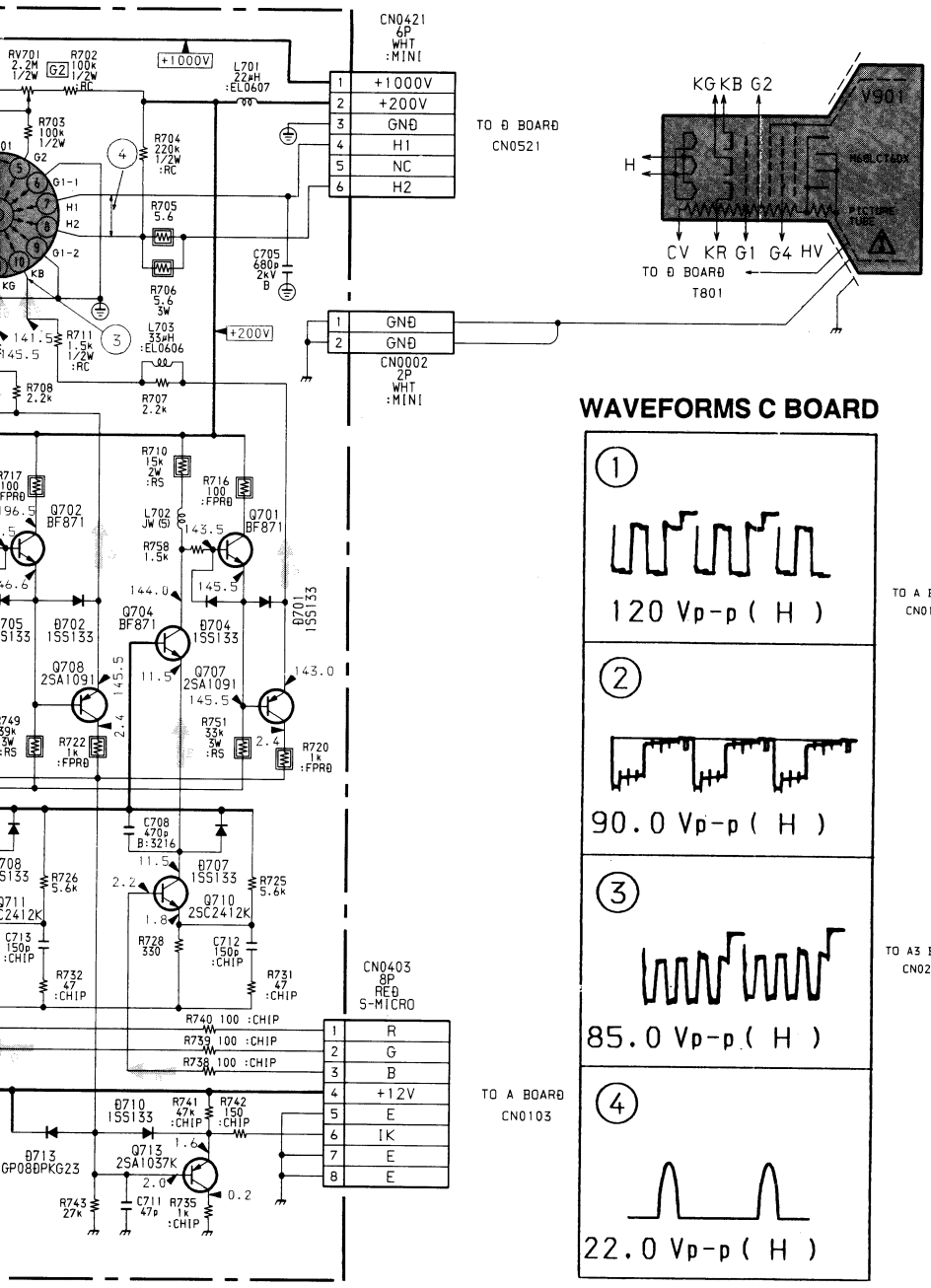

WAVEFORMS C BOARD

WAVEFORMS D5 BOARD

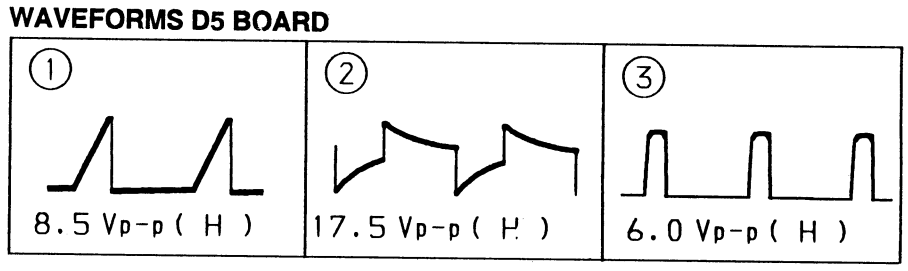

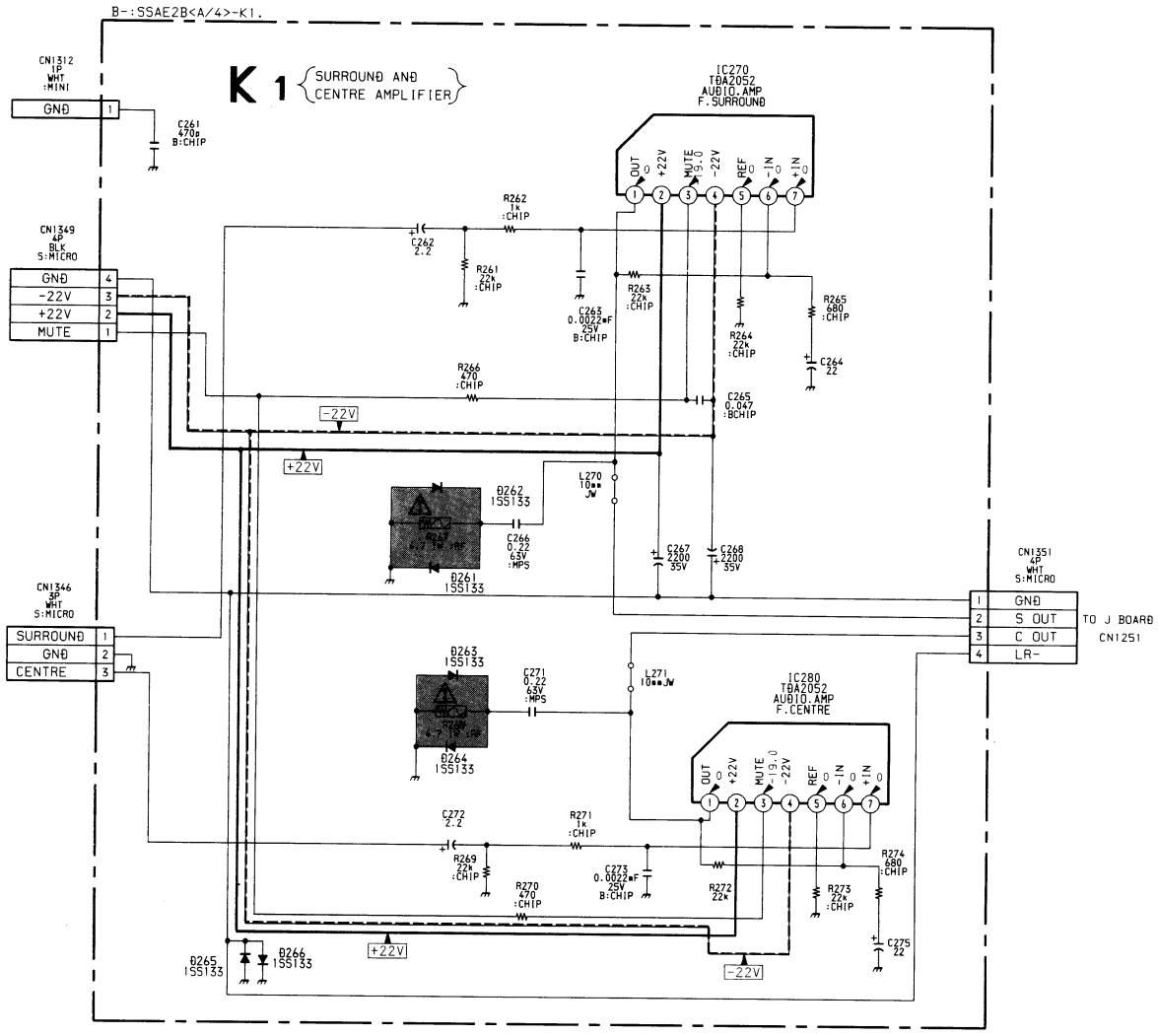

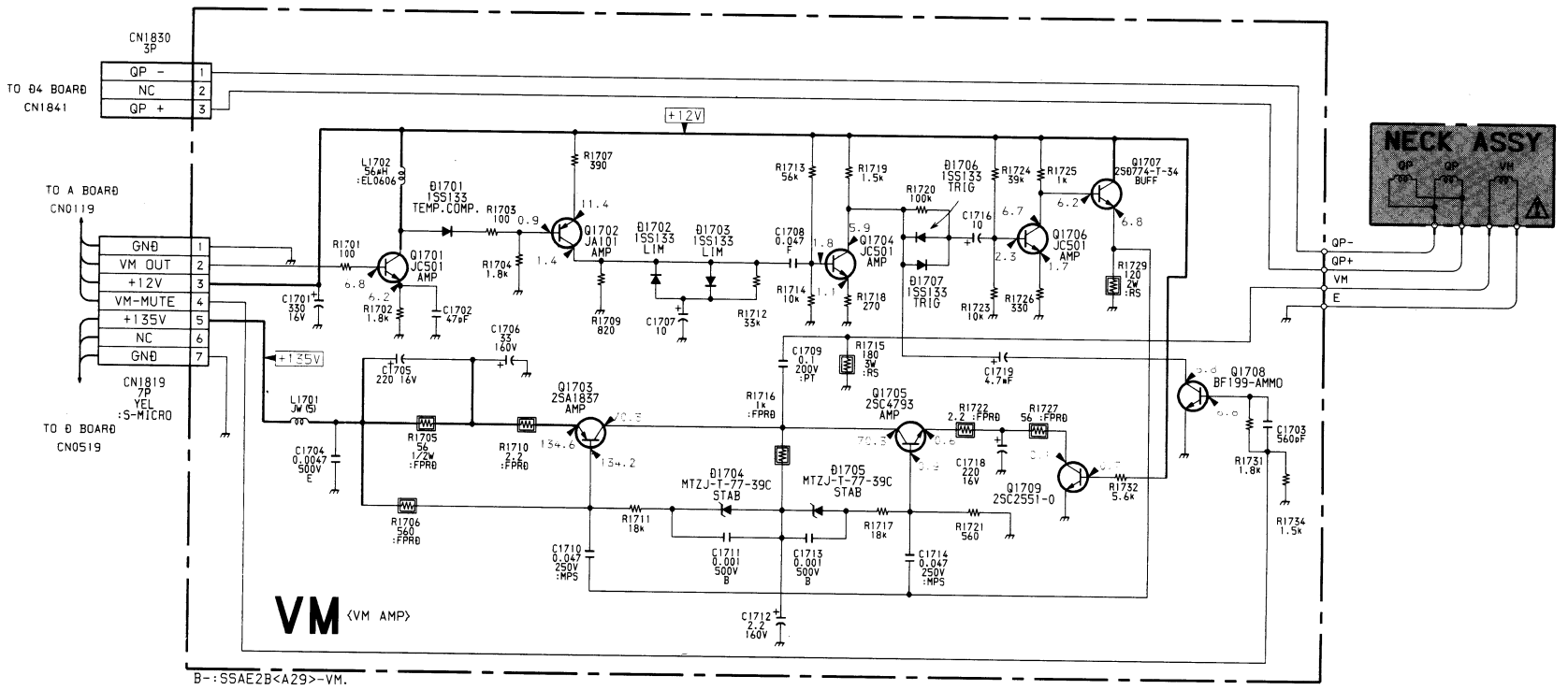

A3 [NICAM DECODER / NICAM DEMODULATOR / GRAPHIC EQUALIZER, DOLBY] **K1** [SURROUND AND CENTRE AMPLIFIER] **D5** [PIN CORRECTION] **C** [R.G.B. OUT] **VM** [VM AMP] **D4** [V - PIN Q P]

– A3 BOARD –

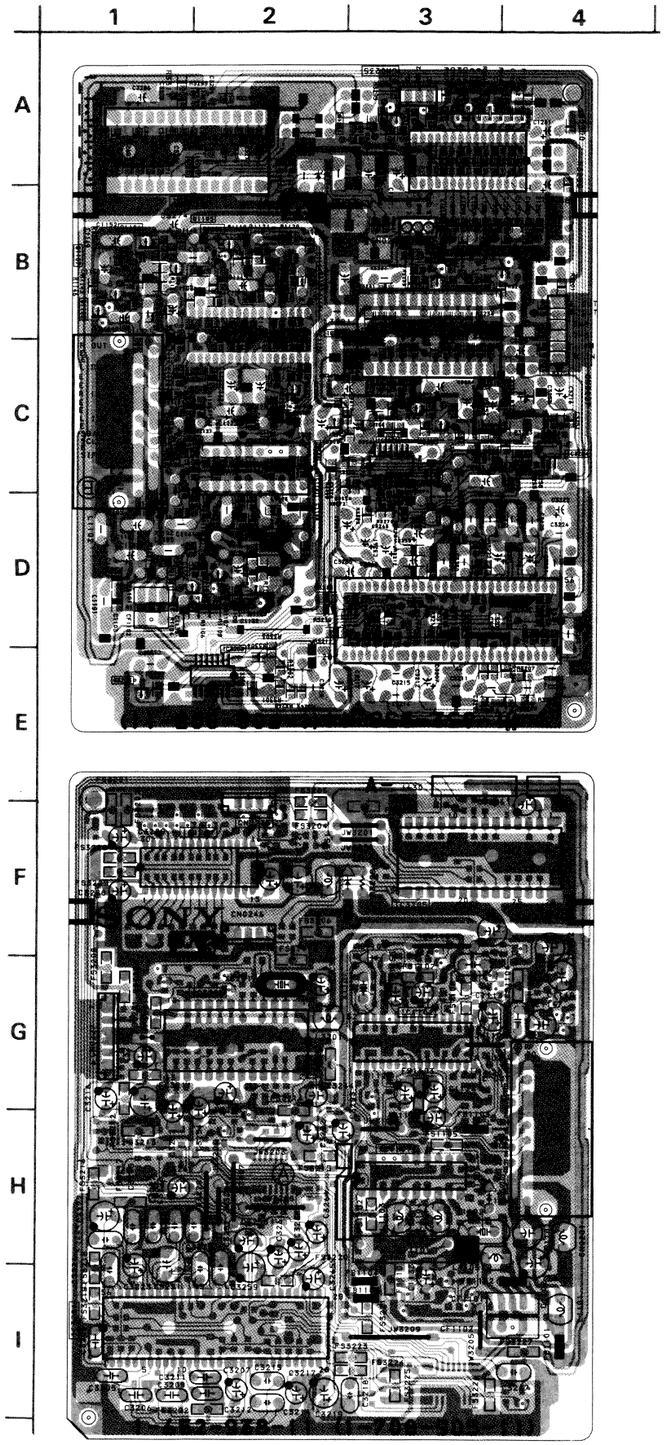

– K1 BOARD –

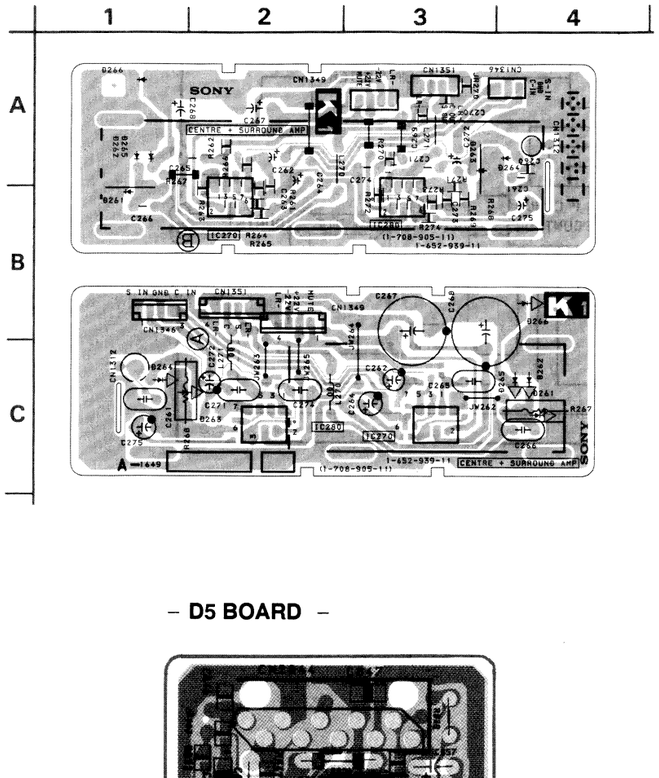

– D5 BOARD –

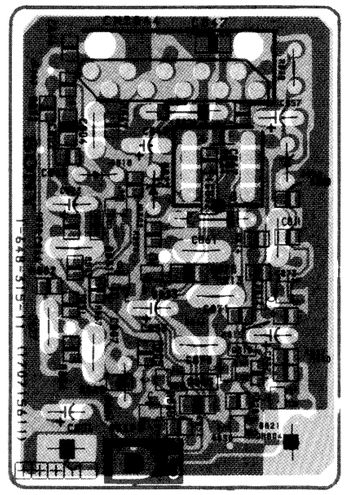

Note :

- : Pattern from the side which enables seeing.
- : Pattern of the rear side.

– C BOARD –

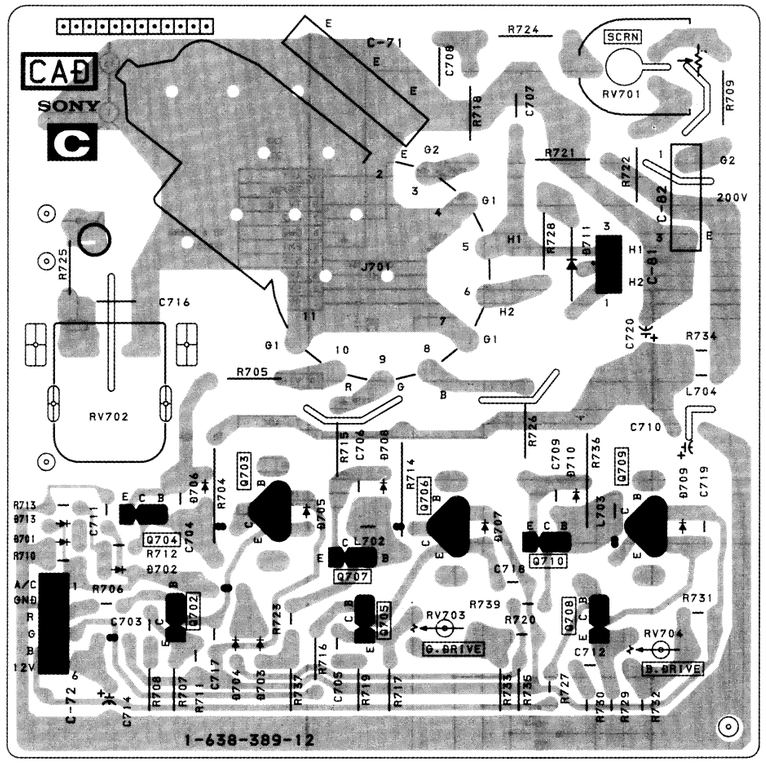

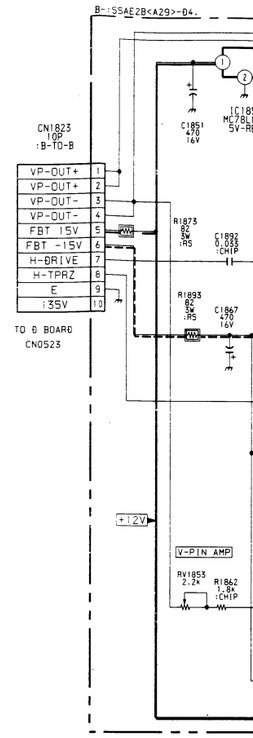

– VM BOARD –

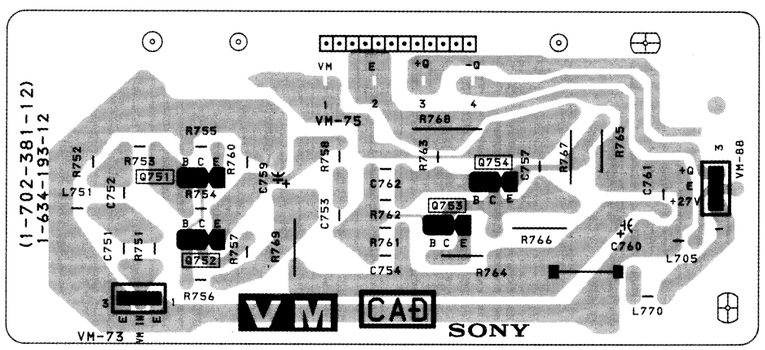

ORRECTION] **C** [R.G.B. OUT] **VM** [VM AMP] **D4** [V - PIN Q P]

2 3 4

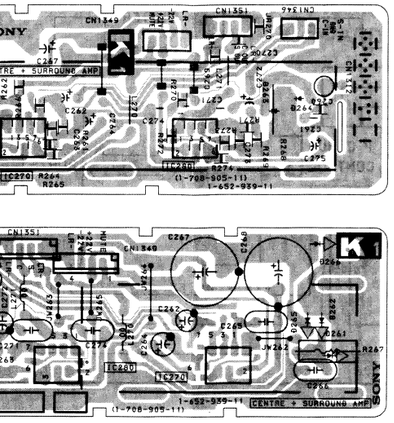

5 BOARD –

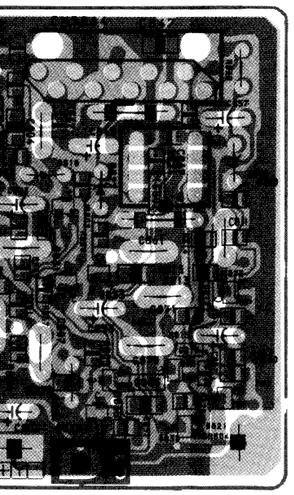

: Pattern from the side which enables seeing.
: Pattern of the rear side.

– C BOARD –

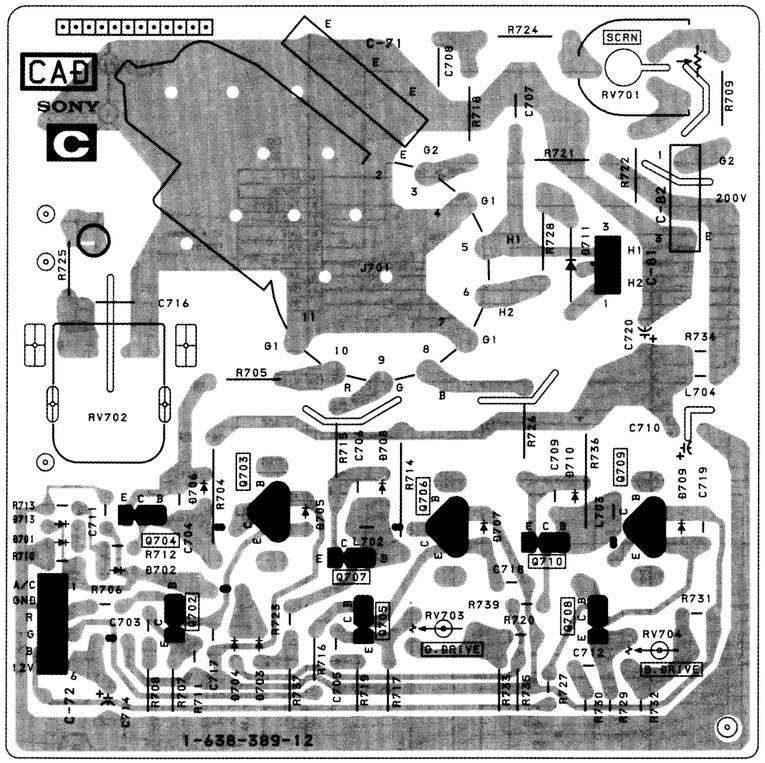

– VM BOARD –

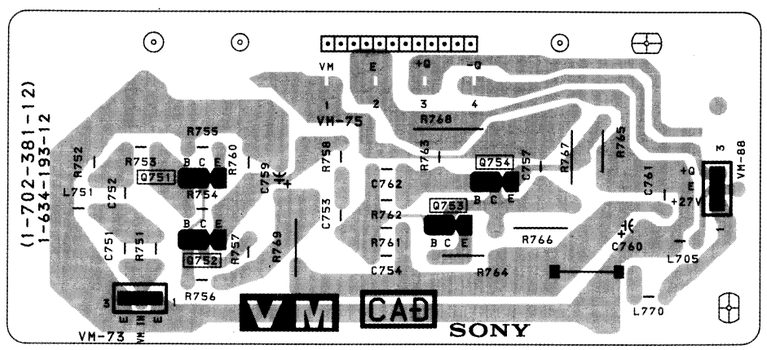

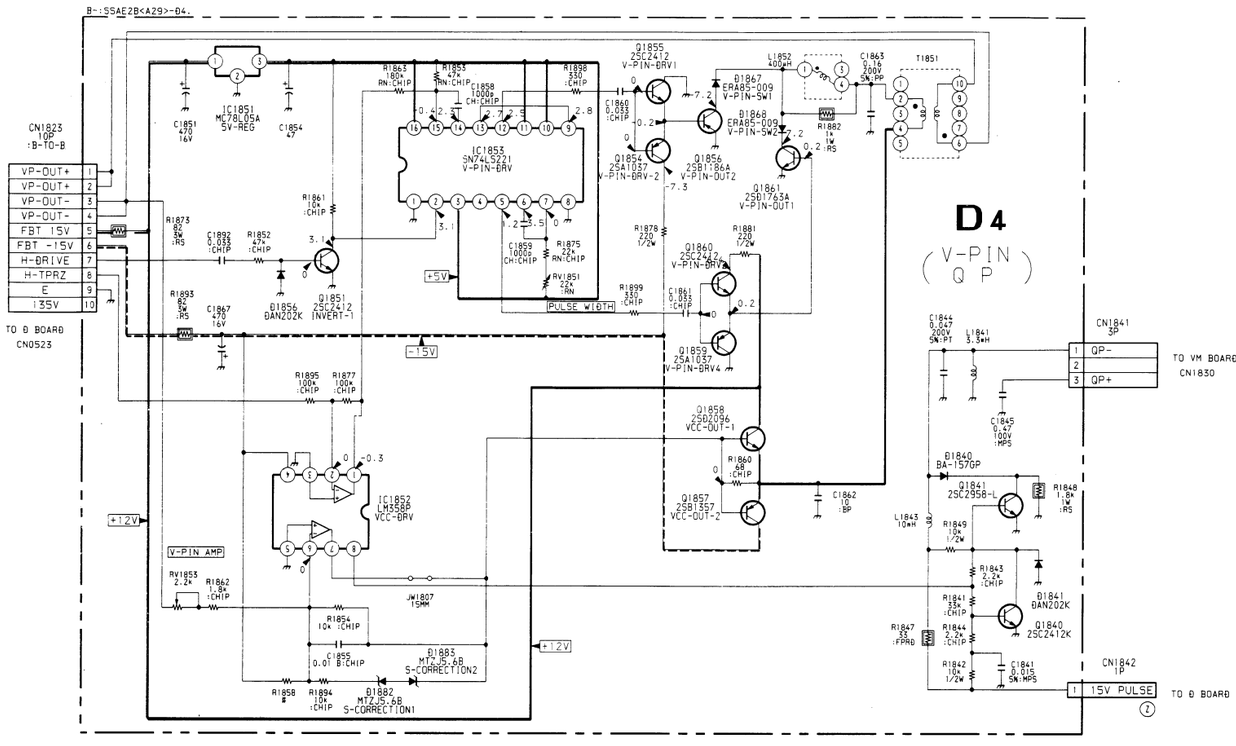

– D4 BOARD –

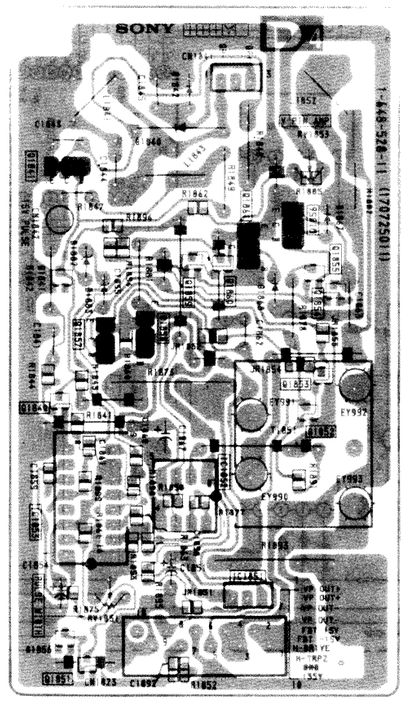

KV-A294 KV-A294

IFH389F (French Model)

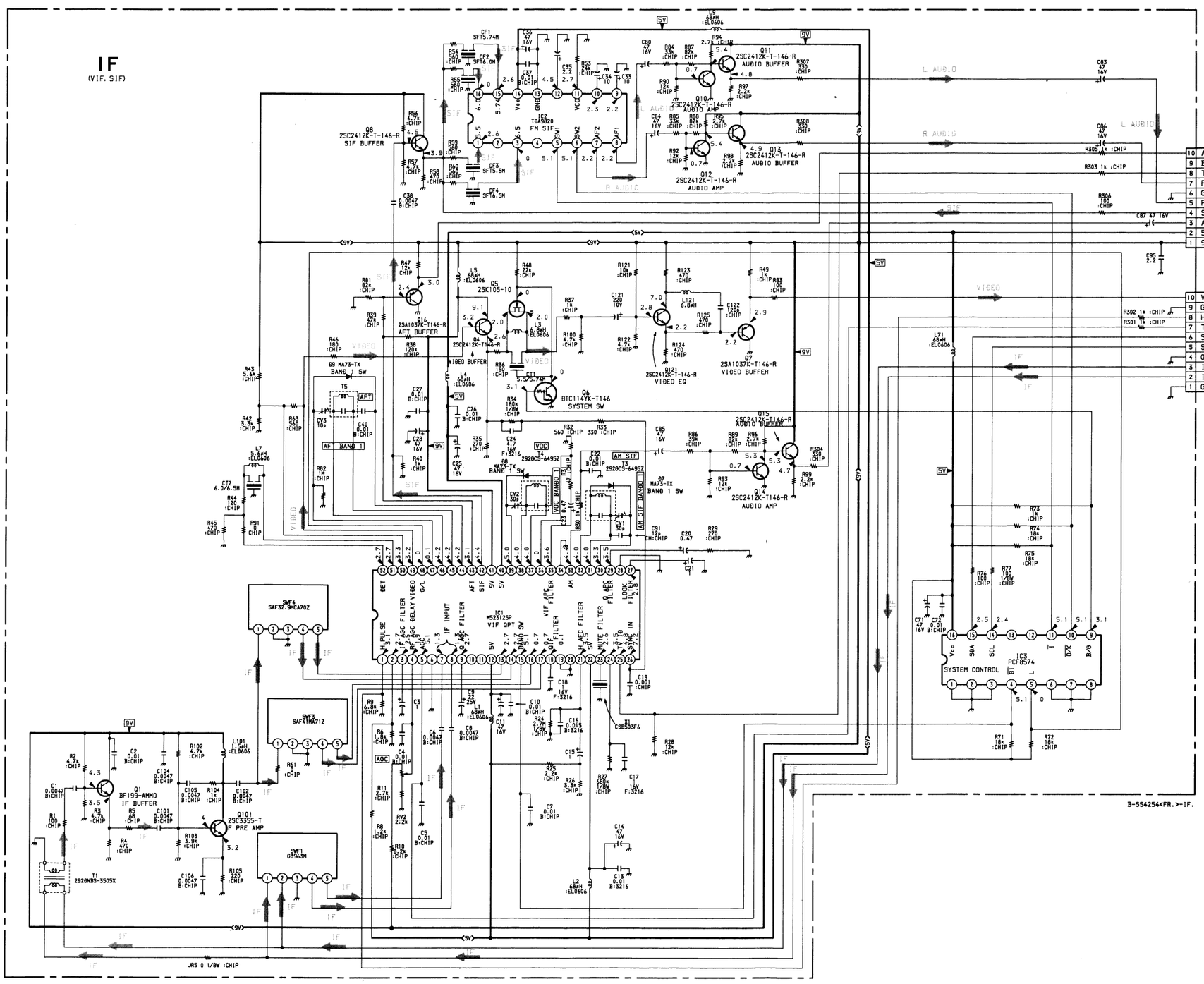

IF BOARD IC3 PC8574 (French Model)

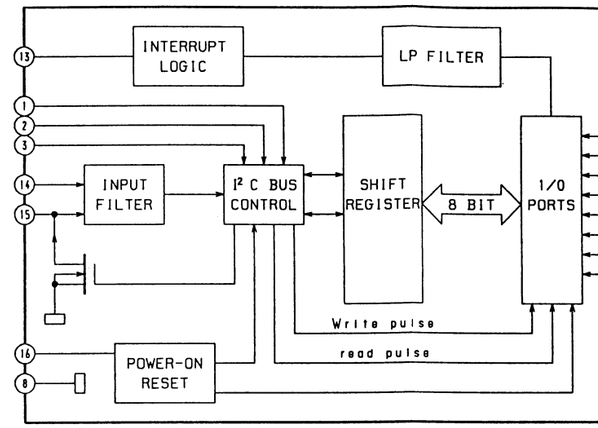

7 | 8 | 9 | 10 | 11 | 12

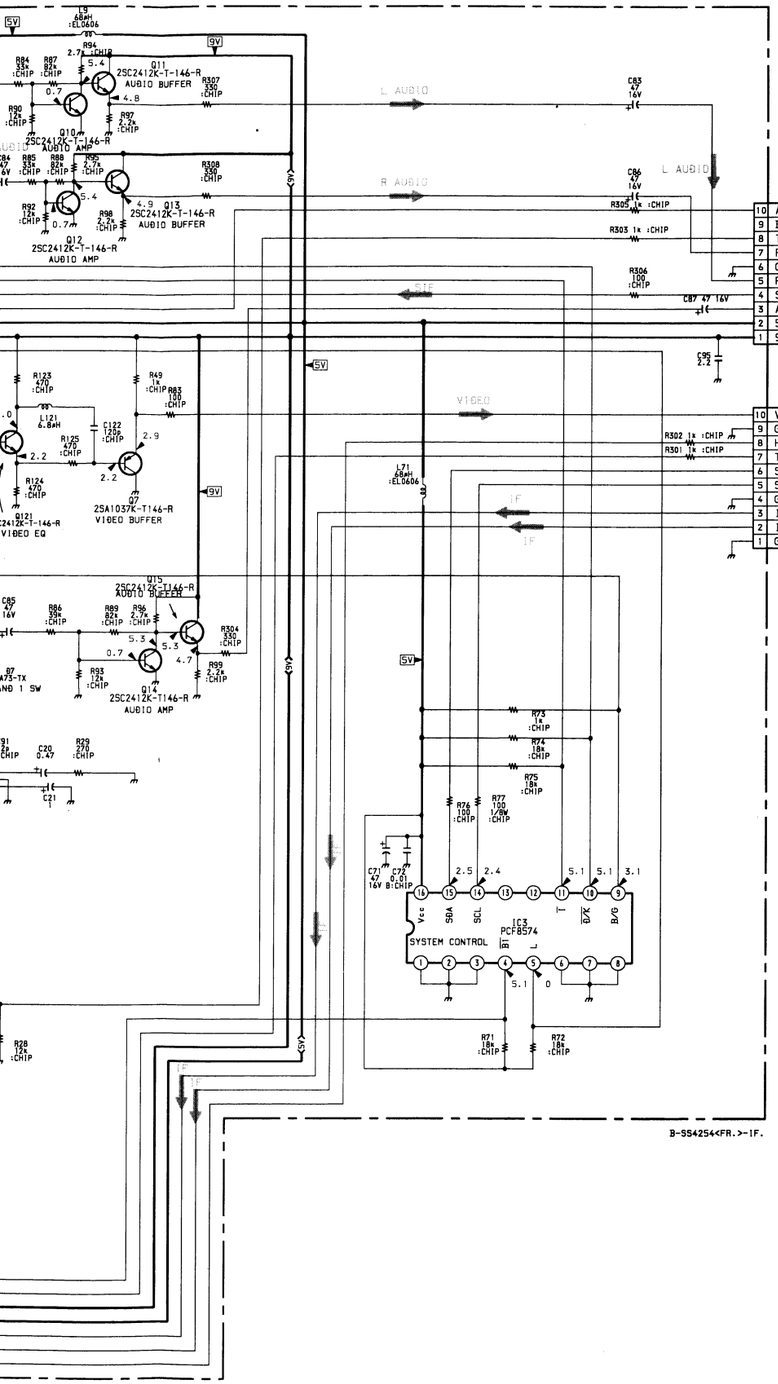

B-SS4254<FR.>-IF.

IF BOARD IC3 PC8574 (French Model)

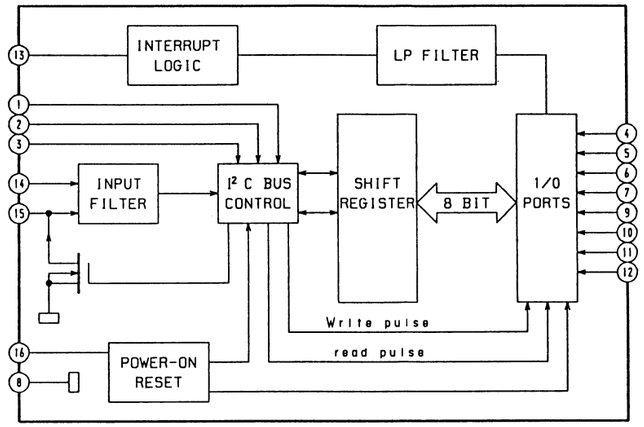

IF [VIF, SIF]

– IF BOARD – (French Model)

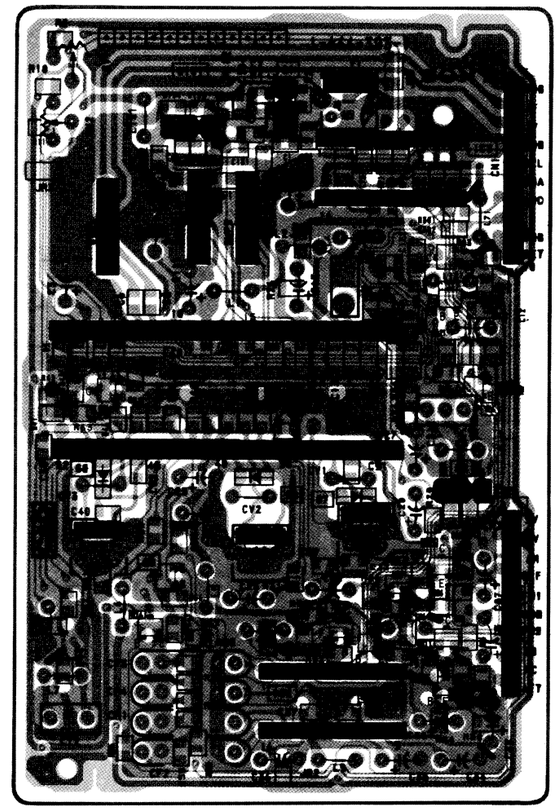

Note :

- : Pattern from the side which enables seeing.
- : Pattern of the rear side.

IFH389 (AEP, Italian, Spanish Model)

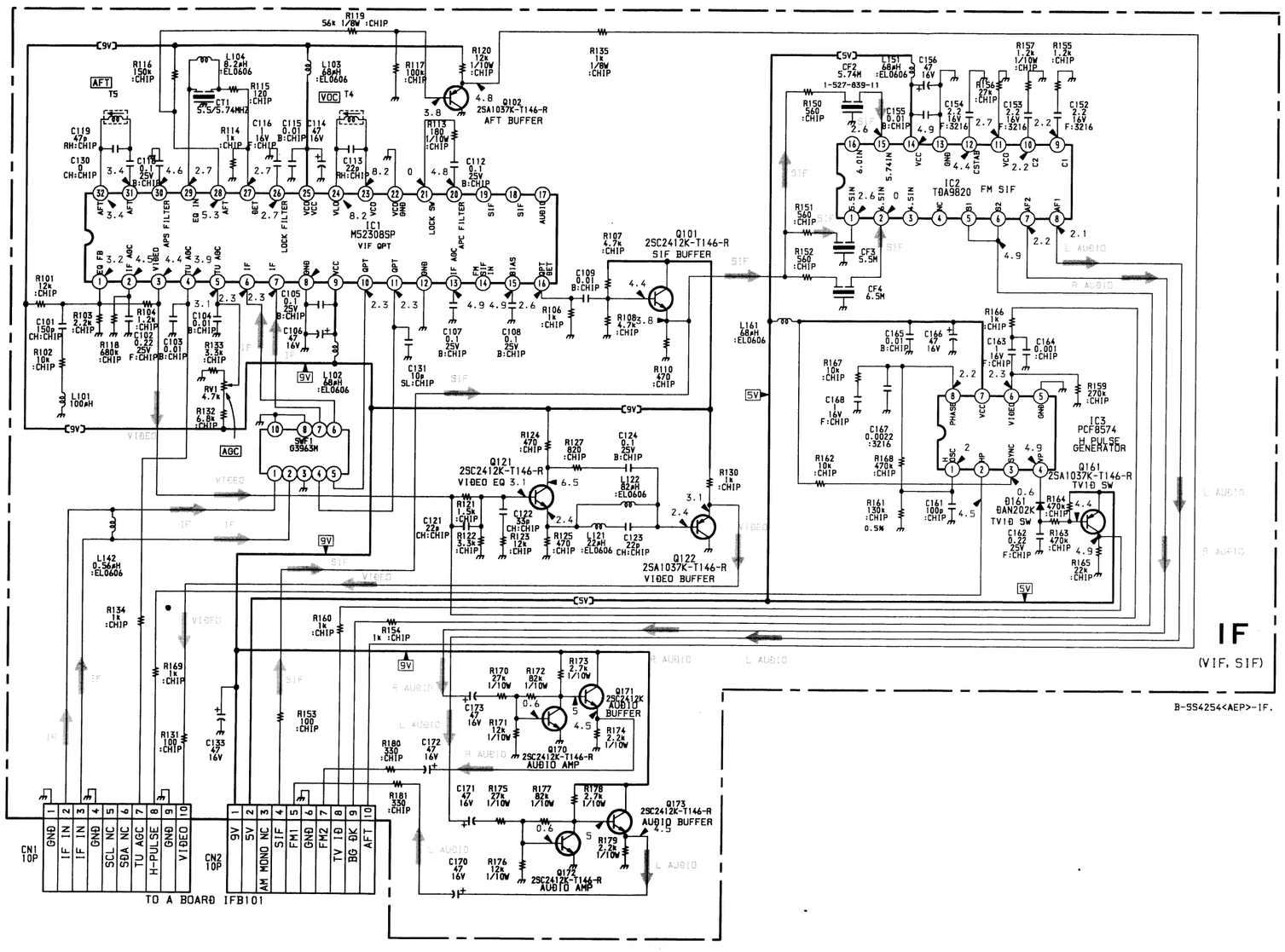

IF395 (UK MODEL)

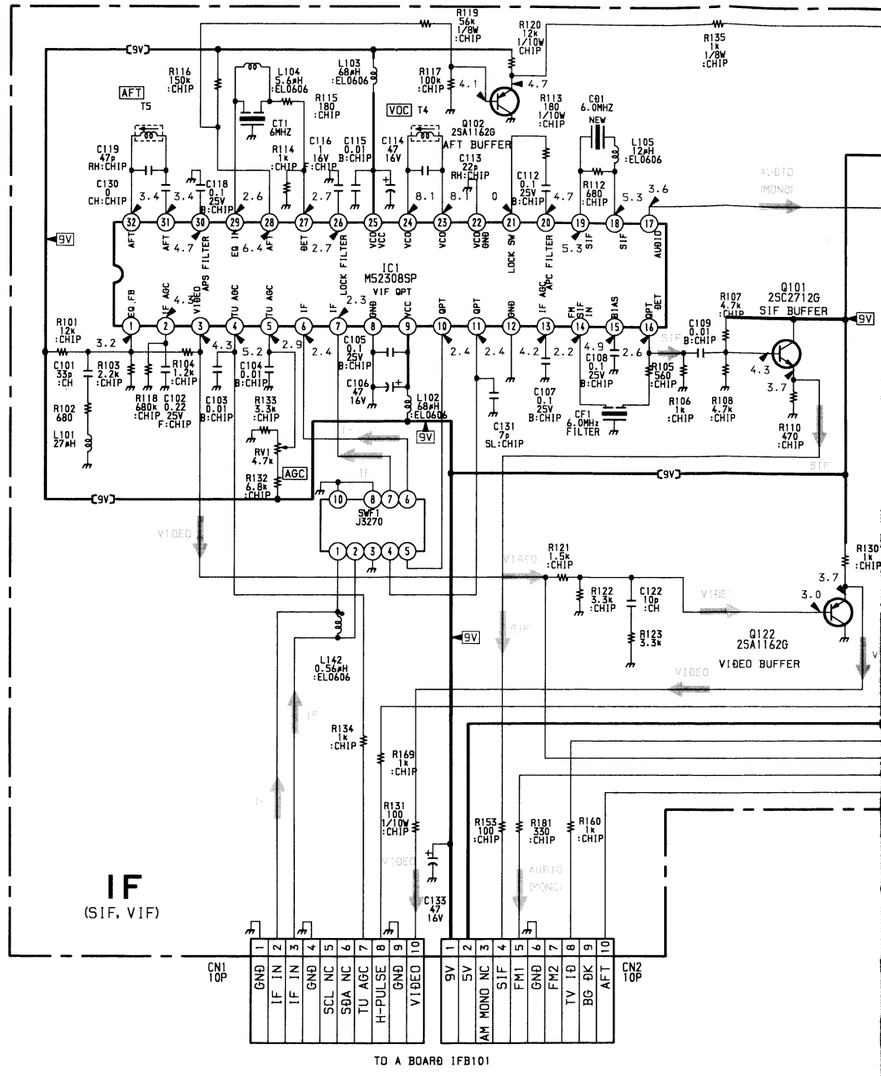

15 | 16 | 17 | 18 | 19 | 20

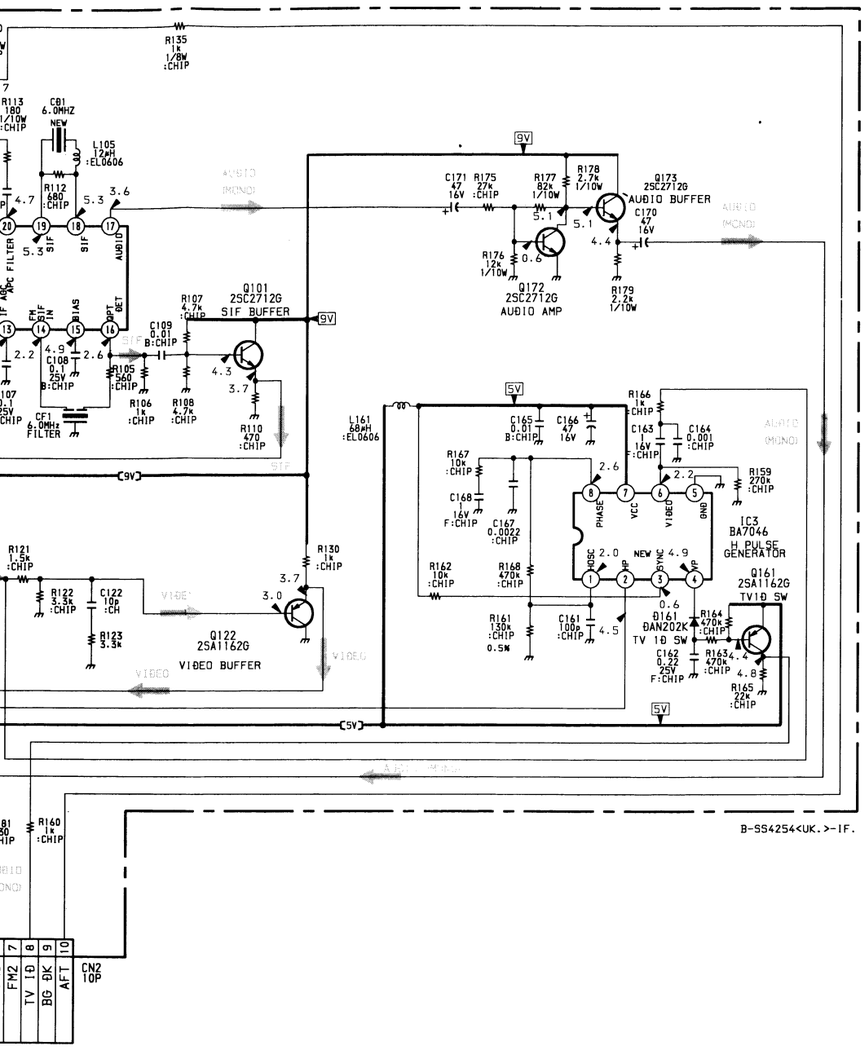

IF [VIF, SIF]

– IF BOARD – (AEP, Italian, Spanish Model)

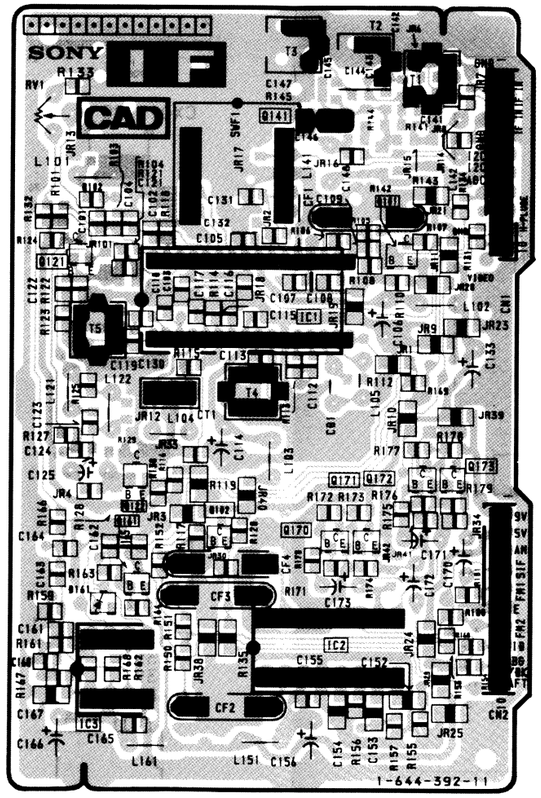

– IF BOARD – (UK Model)

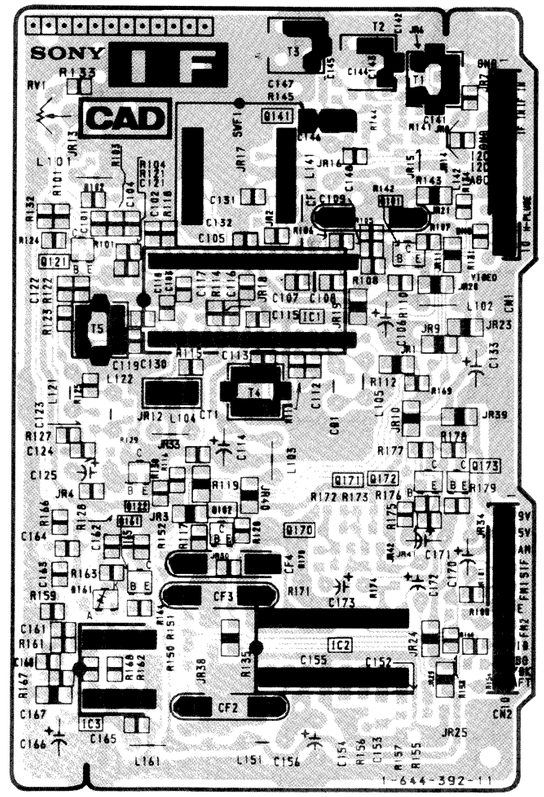

IF BOARD IC2 TDA9820 (AEP, Italian, Spanish Model)

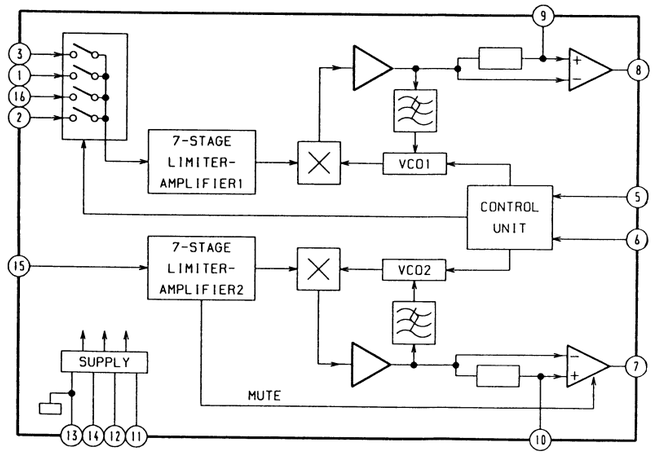

IF BOARD IC3 BA7046 (AEP, Italian, Spanish, UK Model)

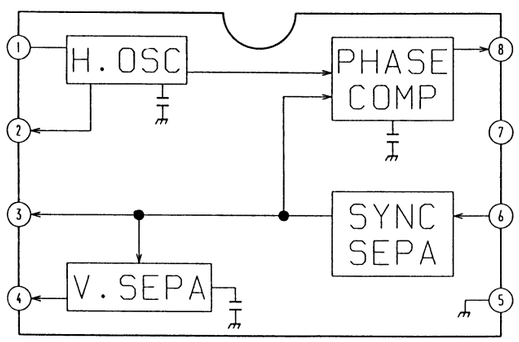

5-4. SCHEMATIC DIAGRAM OF TUNER A BOARD TU101 UV916H

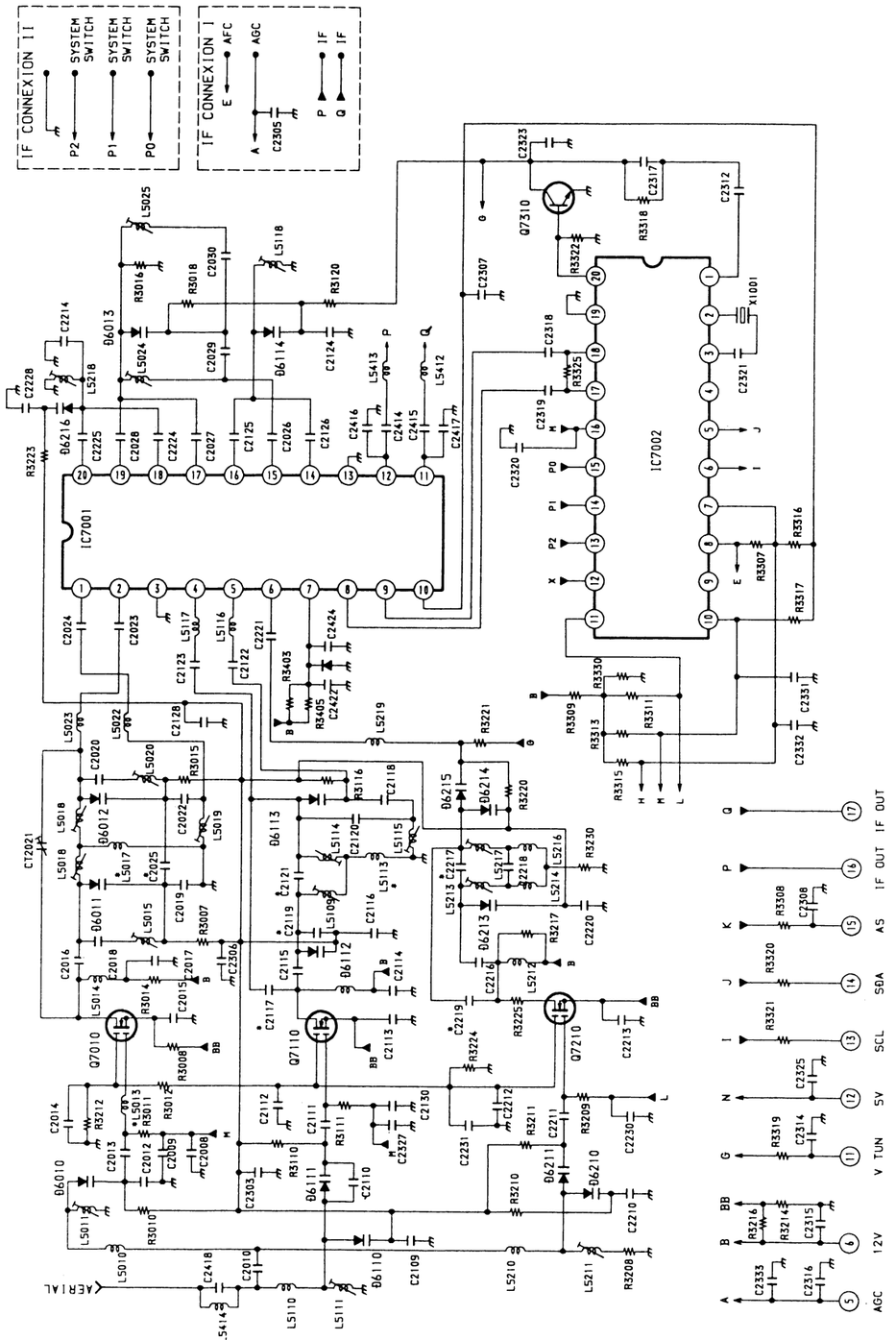

4-34
58
4-34

86A
98B-Y
63A

93

85-HFE

27-01

6A-P
2

1

2SD2096-EF

2SK1916-53-F50

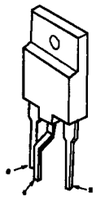

DAN202K
DAP202K
1S2836

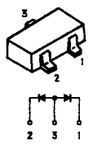

DA204K

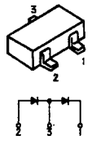

1SS226

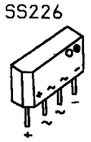

DSL60

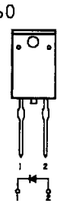

D10SC6M

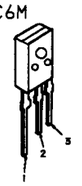

DGP20G
ERC25-06S
RGP02-20EL-6394
RU30ALFS1
RU3AM

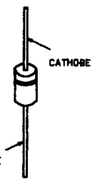

EL1Z
ERB44-06
GP08D
RGP10GPKG23
RGP15GPKG23
R2K-V1
1N4148A-T265

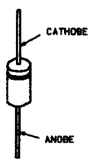

ERA85-009
MTZJ-T-77-12B
MTZJ-T-77-13C
MTZJ-T-77-15A
MTZJ-T-77-2.2A
MTZJ-T-77-3.6A
MTZJ-T-77-30B
MTZJ-T-77-33C
MTZJ-T-77-39C
MTZJ-T-77-5.6A
MTZJ-T-77-5.6B
MTZJ-T-77-7.5A
MTZJ-T-77-9.1
MTZN-1013
RD12ES-B2
RD5.6ES-B1
RD5.6ES-B2
RD6.2ES-B2
RD7.5ES-B2

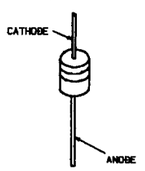

ESAB92-02

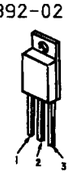

ESAC92M-02

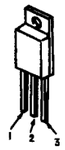

MA152WK

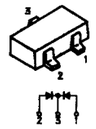

MA3030-H (TK)
MA3039H-TX
MA3047L-TX

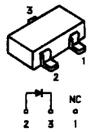

MA3051L-TX

RGP02-17EL-6433

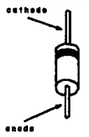

LD201VR

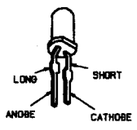

SECTION 6
EXPLODED VIEWS

NOTE :

- Items with no part number and no description are not stocked because they are seldom required for routine service.
- The construction parts of an assembled part are indicated with a collation number in the remarks column.
- Items marked " * " are not stocked since they are seldom required for routine service. Some delay should be anticipated when ordering these items.

The components identified by shading and marked ⚠ are critical for safety.
Replace only with the part number specified.

6-1. CHASSIS

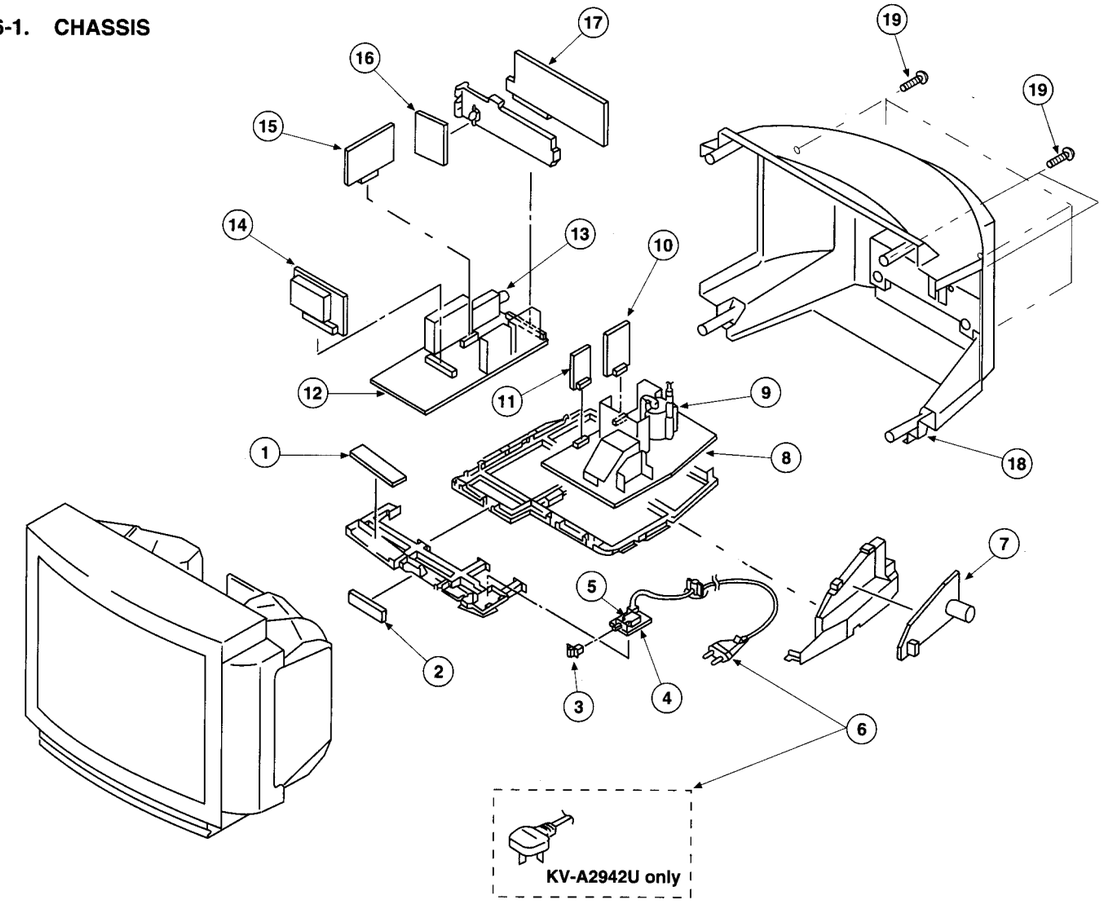

REF NO	PART NO	DESCRIPTION	REMARK
1	*1-648-314-11	H1 BOARD	
2	*1-652-942-11	H2 BOARD	
4	*1-648-312-12	F1 BOARD	
7	*A-1624-018-A	F2 BOARD, COMPLETE (KV-A2941A/A2941D)	
	*A-1624-036-A	F2 BOARD, COMPLETE (KV-A2941B/A2943E/A2941K/A2942U)	
8	*A-1642-097-A	D BOARD, COMPLETE	
10	*A-1640-109-A	D5 BOARD, COMPLETE	
11	*A-1642-102-A	D4 BOARD, COMPLETE	
12	*A-1632-218-A	A BOARD, COMPLETE (KV-A2941A/A2941D/A2941K)	
	*A-1632-222-A	A BOARD, COMPLETE (KV-A2941B)	
	*A-1632-221-A	A BOARD, COMPLETE (KV-A2943E)	
	*A-1632-192-A	A BOARD, COMPLETE (KV-A2942U)	
13	1-693-185-11	TUNER (UV916H) (KV-A2941A/A2941B/A2941D/A2943E/A2941K)	
	1-693-184-11	TUNER (U944C) (KV-A2942U)	
14	*A-1635-023-A	M2 BOARD, COMPLETE	
15	*A-1630-249-A	A3 BOARD, COMPLETE (KV-A2941A/A2941B/A2941D/A2941K)	
	*A-1630-252-A	A3 BOARD, COMPLETE (KV-A2943E)	
	*A-1630-219-A	A3 BOARD, COMPLETE (KV-A2942U)	
16	*A-1649-009-A	K1 BOARD, COMPLETE	
17	*A-1651-064-A	J BOARD, COMPLETE	
18	4-202-510-11	COVER, REAR	
19	4-039-358-11	SCREW (4X16), (+) BV TAPPING	

The components identified by shading and marked ⚠ are critical for safety.
Replace only with the part number specified.

6-2. PICTURE TUBE

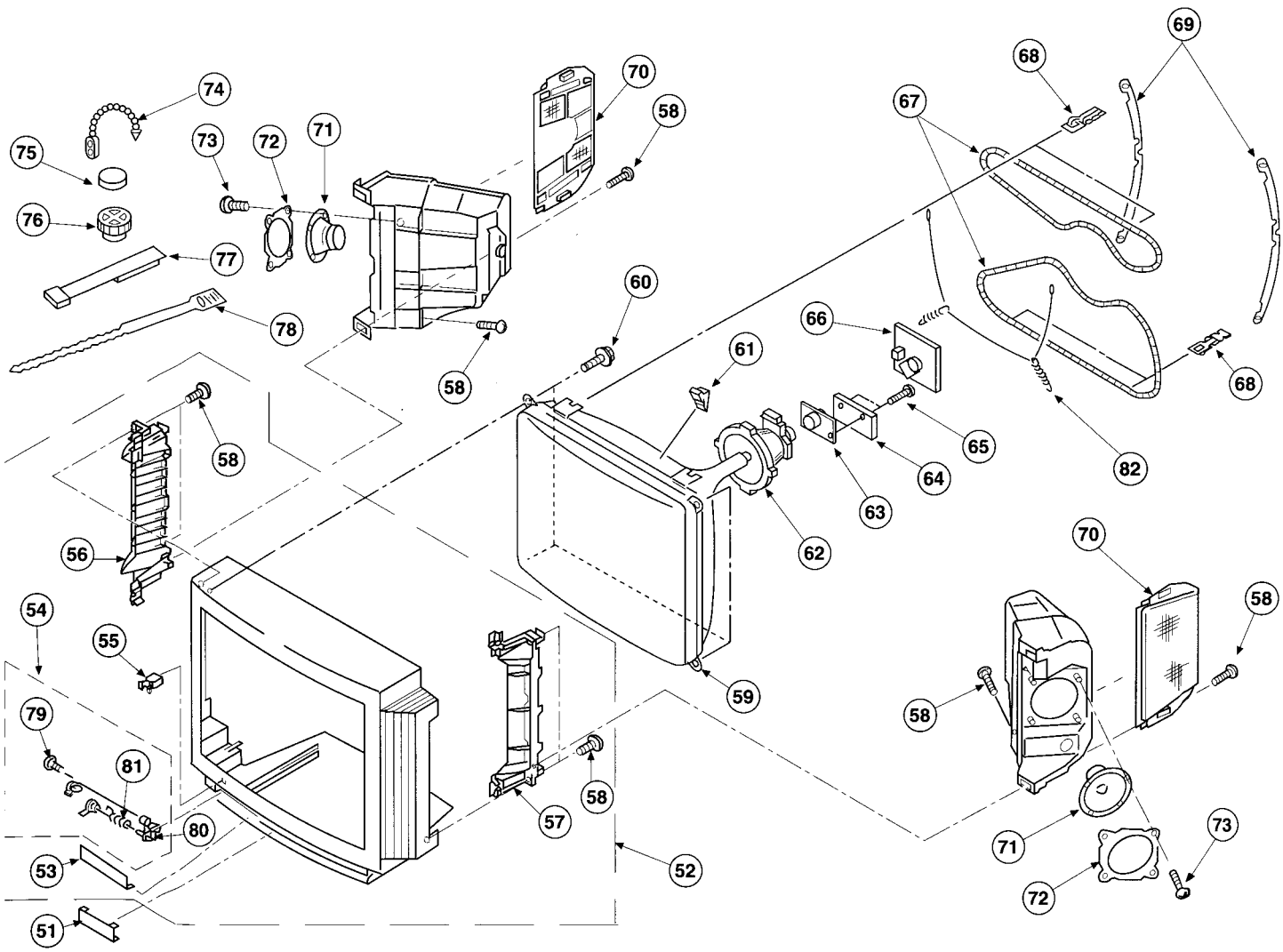

REF NO		PART NO	DESCRIPTION	REMARK
51		4-202-492-31	WINDOW, ORNAMENTAL	
52		X-4200-138-1	CABINET ASSY (WITH BEZEL ASSY) 53~58, 79~81	
53		4-202-493-01	DOOR	
54		X-4031-244-1	DAMPER ASSY	79~81
55		4-392-036-01	CATCHER, PUSH	
56		*4-202-509-01	HOLDER (L), SPEAKER	
57		*4-202-508-01	HOLDER (R), SPEAKER	
58		4-039-358-01	SCREW (4x16), BV TAPPING	
59	⚠	8-733-853-05	PICTURE TUBE (M68LCT60X)	
60		4-036-188-01	SCREW (M), PT	
61		3-704-495-01	SPACER, DY	
62	⚠	8-451-422-11	DEFLECTION YOKE (Y29GXA)	
63	⚠	1-452-509-41	NECK ASSY, PICTURE TUBE (NA-308)	
64		*A-1644-040-A	VM BOARD, COMPLETE	
65		4-039-357-01	SCREW (3X8), (+) BV TAPPING	

REF NO		PART NO	DESCRIPTION	REMARK
66		*A-1638-042-A	C BOARD, COMPLETE	
67	⚠	1-406-807-11	COIL, DEMAGNETIZATION	
68		4-202-415-01	CLIP, DGC (29")	
69		4-202-416-01	BAND, DGC	
70		X-4200-136-1	GRILLE ASSY, SPEAKER	
71		1-544-475-21	SPEAKER	
72		4-202-469-01	CLAMP, SPEAKER	
73		4-039-358-11	SCREW (4x16), (+) BV TAPPING	
74		4-308-870-00	CLIP, LEAD WIRE	
75		1-452-032-00	MAGNET, DISK; 10MM Ø	
76		1-452-094-00	MAGNET, ROTATABLE DISK; 15MM Ø	
77		X-4306-312-0	PERMALLOY ASSY, CONVERGENCE	
78		3-701-007-00	BAND, BINDING	
79		4-033-184-01	SCREW, SPECIAL	
80		4-041-017-01	SHAFT (MAIN), DAMPER DOOR	
81		4-041-016-01	SPRING	
82		4-200-433-01	SPRING, EXTENSION	

ELECTRICAL PARTS LIST

SECTION 3

The components identified by shading and marked ⚠ are critical for safety.
Replace only with the part number specified.

- Items marked " * " are not stocked since they are seldom required for routine service. Some delay should be anticipated when ordering these items.
- All variable and adjustable resistors have characteristic curve B, unless otherwise noted.

RESISTORS

- All resistors are in ohms
- F : nonflammable

When indicating parts by reference number, please include the board name.

CAPACITORS MF : mF, PF : mmF

COILS MMH : mH, μH : mH

F1 | F2 | A3 (KV-A2941A/A2941B KV-A2941D/A2941K)

REF.NO.	PART NO.	DESCRIPTION			REMARK
	*1-648-312-12	F1 BOARD			
		********			
		< CONNECTOR >			
CN0003 ⚠	*1-580-844-11	PIN, CONNECTOR (POWER)			
CN0831 ⚠	*1-695-292-11	PIN, CONNECTOR (POWER)			
		< FUSE >			
F651 ⚠	1-576-232-21	FUSE (H.B.C.) 5A 250V			
	1-533-230-11	HOLDER, FUSE			
		< SWITCH >			
S651 ⚠	1-571-433-11	SWITCH, PUSH (AC POWER)			
**********					
	*A-1624-018-A	F2 BOARD, COMPLETE (KV-A2941A/A2941D)			
		******************			
	*A-1624-036-A	F2 BOARD, COMPLETE (KV-A2941B/A2943E/			
		****************** A2941K/A2942U)			
		< CAPACITOR >			
C661 ⚠	1-136-519-12	FILM	0.47MF	20%	300V
C662 ⚠	1-136-518-12	FILM	0.33MF	20%	300V
C664 ⚠	1-164-503-61	CERAMIC	0.0022MF	20%	400V
C666	1-124-479-11	ELECT	330MF	20%	25V
C667	1-126-337-11	ELECT	22MF	20%	50V
C672 ⚠	1-161-964-61	CERAMIC	0.0047MF		250V
C673 ⚠	1-161-964-61	CERAMIC	0.0047MF		250V
C674	1-125-555-11	ELECT	330MF	20%	400V
		< CONNECTOR >			
CN0005	1-508-765-00	PIN, CONNECTOR (5MM PITCH) 3P			
CN0007	1-508-786-00	PIN, CONNECTOR (5MM PITCH) 2P			
CN0924	*1-568-878-51	PIN, CONNECTOR 3P			
CN0925	*1-695-294-11	PIN, CONNECTOR (PC BOARD) 6P			
CN0929	1-508-784-00	PIN, CONNECTOR (5MM PITCH) 1P			
CN0931 ⚠	*1-691-291-11	PIN, CONNECTOR (PC BOARD) 5P			
		< DIODE >			
D661	8-719-901-33	DIODE 1SS133			
D663	8-719-510-53	DIODE D4SB60L			
D664	8-719-109-89	DIODE RD5.6ESB2			
		< TRANSFORMER >			
LF661 ⚠	1-423-688-11	TRANSFORMER, LINE FILTER (LFT)			
LF662 ⚠	1-424-391-11	TRANSFORMER, LINE FILTER (LFT)			
		(KV-A2941A/A2941D)			
		< TRANSISTOR >			
Q661	8-729-920-74	TRANSISTOR 2SC2412K-QR			
		< RESISTOR >			
R663 ⚠	1-244-945-91	CARBON	1M	5%	1/2W
R664 ⚠	1-205-949-11	WIREWOUND	1.8	5%	10W
R665 ⚠	1-218-265-11	METAL GLAZE	8.2M	5%	1W
R666	1-249-405-11	CARBON	100	5%	1/4W F
R667	1-249-430-11	CARBON	12K	5%	1/4W
R668	1-249-436-11	CARBON	39K	5%	1/4W
R669 ⚠	1-205-949-11	WIREWOUND	1.8	5%	10W
R671	1-249-417-11	CARBON	1K	5%	1/4W F
		< RELAY >			
RY661 ⚠	1-515-720-31	RELAY			
		< THERMISTOR >			
THP661 ⚠	1-809-827-11	THERMISTOR, POSITIVE			
**********					
	*A-1630-249-A	A3 BOARD, COMPLETE (KV-A2941A/A2941B/			
		****************** A2941D/A2941K)			
		< CAPACITOR >			
C1101	1-126-101-11	ELECT	100MF	20%	16V
C1102	1-126-101-11	ELECT	100MF	20%	16V
C1103	1-163-077-91	CERAMIC CHIP	0.1MF		50V
C1104	1-163-077-00	CERAMIC CHIP	0.1MF	10%	25V
C1251	1-163-009-11	CERAMIC CHIP	0.001MF	10%	50V
C1252	1-163-010-11	CERAMIC CHIP	0.0012MF	10%	50V
C1253	1-163-014-00	CERAMIC CHIP	0.0027MF	10%	50V
C1254	1-163-014-00	CERAMIC CHIP	0.0027MF	10%	50V
C1255	1-164-232-11	CERAMIC CHIP	0.01MF	10%	50V
C1256	1-163-022-00	CERAMIC CHIP	0.012MF	10%	50V
C1257	1-163-986-00	CERAMIC CHIP	0.027MF	10%	25V
C1258	1-163-986-00	CERAMIC CHIP	0.027MF	10%	25V
C1259	1-164-004-11	CERAMIC CHIP	0.1MF	10%	25V
C1260	1-164-348-11	CERAMIC CHIP	0.12MF	10%	25V
C1261	1-163-009-11	CERAMIC CHIP	0.001MF	10%	50V

A3 (KV-A2941A/A2941B KV-A2941D/A2941K)

REF.NO.	PART NO.	DESCRIPTION		REMARK
C1262	1-163-010-11	CERAMIC CHIP 0.0012MF	10%	50V
C1263	1-163-014-00	CERAMIC CHIP 0.0027MF	10%	50V
C1264	1-163-014-00	CERAMIC CHIP 0.0027MF	10%	50V
C1265	1-164-232-11	CERAMIC CHIP 0.01MF	10%	50V
C1266	1-163-022-00	CERAMIC CHIP 0.012MF	10%	50V
C1267	1-163-986-00	CERAMIC CHIP 0.027MF	10%	25V
C1268	1-163-986-00	CERAMIC CHIP 0.027MF	10%	25V
C1269	1-164-004-11	CERAMIC CHIP 0.1MF	10%	25V
C1270	1-164-348-11	CERAMIC CHIP 0.12MF	10%	25V
C1271	1-124-916-11	ELECT 22MF	20%	50V
C1272	1-124-910-11	ELECT 47MF	20%	50V
C3201	1-164-004-11	CERAMIC CHIP 0.1MF	10%	25V
C3202	1-164-004-11	CERAMIC CHIP 0.1MF	10%	25V
C3203	1-164-004-11	CERAMIC CHIP 0.1MF	10%	25V
C3204	1-136-157-00	FILM 0.022MF	5%	50V
C3205	1-136-157-00	FILM 0.022MF	5%	50V
C3206	1-136-165-00	FILM 0.1MF	5%	50V
C3207	1-136-161-00	FILM 0.047MF	5%	50V
C3208	1-163-137-00	CERAMIC CHIP 680PF	5%	50V
C3209	1-136-165-00	FILM 0.1MF	5%	50V
C3210	1-163-137-00	CERAMIC CHIP 680PF	5%	50V
C3211	1-136-161-00	FILM 0.047MF	5%	50V
C3212	1-124-907-11	ELECT 10MF	20%	50V
C3213	1-124-907-11	ELECT 10MF	20%	50V
C3214	1-136-165-00	FILM 0.1MF	5%	50V
C3215	1-136-165-00	FILM 0.1MF	5%	50V
C3216	1-124-907-11	ELECT 10MF	20%	50V
C3217	1-124-907-11	ELECT 10MF	20%	50V
C3218	1-137-368-11	FILM 0.0047MF	5%	50V
C3219	1-124-916-11	ELECT 22MF	20%	63V
C3220	1-164-004-11	CERAMIC CHIP 0.1MF	10%	25V
C3221	1-136-169-00	FILM 0.22MF	5%	50V
C3222	1-124-927-11	ELECT 4.7MF	20%	50V
C3223	1-124-927-11	ELECT 4.7MF	20%	50V
C3224	1-136-169-00	FILM 0.22MF	5%	50V
C3225	1-136-169-00	FILM 0.22MF	5%	50V
C3226	1-136-169-00	FILM 0.22MF	5%	50V
C3227	1-136-175-00	FILM 0.68MF	5%	50V
C3228	1-163-133-00	CERAMIC CHIP 470PF	5%	50V
C3229	1-137-368-11	FILM 0.0047MF	5%	50V
C3230	1-136-161-00	FILM 0.047MF	5%	50V
C3231	1-124-911-11	ELECT 220MF	20%	50V
C3232	1-124-927-11	ELECT 4.7MF	20%	50V
C3233	1-136-015-00	CERAMIC CHIP 0.0033MF		50V
C3234	1-163-133-00	CERAMIC CHIP 470PF	5%	50V
C3235	1-163-036-00	CERAMIC CHIP 0.068MF		50V
C3236	1-164-004-11	CERAMIC CHIP 0.1MF	10%	25V
C3237	1-164-004-11	CERAMIC CHIP 0.1MF	10%	25V
C3238	1-124-126-00	ELECT 47MF	20%	10V
C3239	1-163-036-00	CERAMIC CHIP 0.068MF		50V
C3240	1-163-133-00	CERAMIC CHIP 470PF	5%	50V
C3241	1-163-018-00	CERAMIC CHIP 0.0056MF	10%	50V
C3242	1-163-018-00	CERAMIC CHIP 0.0056MF	10%	50V
C3243	1-163-038-00	CERAMIC CHIP 0.1MF		25V
C3244	1-124-477-11	ELECT 47MF	20%	16V
C3245	1-163-237-11	CERAMIC CHIP 27PF	5%	50V
C3246	1-163-237-11	CERAMIC CHIP 27PF	5%	50V
C3247	1-163-038-00	CERAMIC CHIP 0.1MF		25V
C3248	1-124-477-11	ELECT 47MF	20%	16V
C3250	1-163-038-00	CERAMIC CHIP 0.1MF		25V

REF.NO.	PART NO.	DESCRIPTION		REMARK
C3251	1-163-105-00	CERAMIC CHIP 33PF	5%	50V
C3252	1-124-910-11	ELECT 47MF	20%	50V
C3253	1-163-038-00	CERAMIC CHIP 0.1MF		25V
C3255	1-163-105-00	CERAMIC CHIP 33PF	5%	50V
C3256	1-163-038-00	CERAMIC CHIP 0.1MF		25V
C3257	1-137-437-11	FILM 0.0056MF	5%	50V
C3259	1-126-101-11	ELECT 100MF	20%	16V
C3260	1-163-077-91	CERAMIC CHIP 0.1MF		50V
C3264	1-124-907-11	ELECT 10MF	20%	50V
C3265	1-124-907-11	ELECT 10MF	20%	50V
C3266	1-124-907-11	ELECT 10MF	20%	50V
C3267	1-130-772-00	FILM 0.22MF	5%	63V
C3272	1-163-038-00	CERAMIC CHIP 0.1MF		25V
C3273	1-163-011-11	CERAMIC CHIP 0.0015MF	10%	50V
C3274	1-124-910-11	ELECT 47MF	20%	50V
C3275	1-163-011-11	CERAMIC CHIP 0.0015MF	10%	50V
C3276	1-163-809-11	CERAMIC CHIP 0.047MF	10%	25V
C3277	1-163-809-11	CERAMIC CHIP 0.047MF	10%	25V
C3278	1-163-023-00	CERAMIC CHIP 0.015MF	10%	50V
C3279	1-163-023-00	CERAMIC CHIP 0.015MF	10%	50V
C3280	1-163-133-00	CERAMIC CHIP 470PF	5%	50V
C3281	1-164-005-11	CERAMIC CHIP 0.47MF		25V
C3282	1-163-133-00	CERAMIC CHIP 470PF	5%	50V
C3283	1-164-005-11	CERAMIC CHIP 0.47MF		25V
C3284	1-164-005-11	CERAMIC CHIP 0.47MF		25V
C3285	1-164-005-11	CERAMIC CHIP 0.47MF		25V
C3286	1-124-907-11	ELECT 10MF	20%	50V
C3287	1-164-005-11	CERAMIC CHIP 0.47MF		25V
C3288	1-124-907-11	ELECT 10MF	20%	50V
C3289	1-124-907-11	ELECT 10MF	20%	50V
C3290	1-163-038-00	CERAMIC CHIP 0.1MF		25V
C3291	1-163-018-00	CERAMIC CHIP 0.0056MF	10%	50V
C3293	1-124-907-11	ELECT 10MF	20%	50V
		< CONNECTOR >		
CN0201	1-695-300-11	CONNECTOR, BOARD TO BOARD 20		
CN0227	*1-564-509-11	PLUG, CONNECTOR 6P		
CN0235	*1-564-506-11	PLUG, CONNECTOR 3P		
CN0246	*1-564-506-11	PLUG, CONNECTOR 3P		
		< DIODE >		
D3201	8-719-110-14	DIODE RD9.1ESB3		
		< FERRITE BEAD >		
FB1101	1-410-396-41	FERRITE BEAD INDUCTOR 0.45UH		
FB1105	1-410-396-41	FERRITE BEAD INDUCTOR 0.45UH		
FB3201	1-410-396-41	FERRITE BEAD INDUCTOR 0.45UH		
		< IC >		
IC1251	8-759-257-64	IC TDA7317		
IC3201	8-759-267-99	IC M69032P		
IC3202	8-759-300-71	IC HD14053BFP		
IC3203	8-752-069-79	IC CXA1875M-T4		
IC3204	8-759-909-71	IC BA4558F		
IC3205	8-759-266-65	IC TDA6622-5		
IC3206	8-759-633-83	IC M50198P		
		< COIL >		
L1101	1-408-405-00	INDUCTOR 4.7UH		

A3 (KV-A2941A/A2941B KV-A2941D/A2941K)

REF.NO.	PART NO.	DESCRIPTION	REMARK
L1251	1-408-421-00	INDUCTOR 100UH	
L3201	1-408-421-00	INDUCTOR 100UH	
		< TRANSISTOR >	
Q1251	8-729-920-74	TRANSISTOR 2SC2412K-QR	
Q1252	8-729-920-74	TRANSISTOR 2SC2412K-QR	
Q3203	8-729-216-22	TRANSISTOR 2SA1162-G	
Q3205	8-729-920-74	TRANSISTOR 2SC2412K-QR	
Q3206	8-729-920-74	TRANSISTOR 2SC2412K-QR	
Q3207	8-729-216-22	TRANSISTOR 2SA1162-G	
Q3208	8-729-920-74	TRANSISTOR 2SC2412K-QR	
Q3209	8-719-918-98	TRANSISTOR SLP253B-40	
		< RESISTOR >	
JR3201	1-216-295-00	METAL GLAZE 0 5% 1/10W	
JR3202	1-216-295-00	METAL GLAZE 0 5% 1/10W	
JR3203	1-216-295-00	METAL GLAZE 0 5% 1/10W	
JR3204	1-216-295-00	METAL GLAZE 0 5% 1/10W	
JR3206	1-216-295-00	METAL GLAZE 0 5% 1/10W	
JR3208	1-216-296-91	METAL GLAZE 0 5% 1/8W	
JR3209	1-216-296-91	METAL GLAZE 0 5% 1/8W	
JR3210	1-216-296-91	METAL GLAZE 0 5% 1/8W	
JR3211	1-216-296-91	METAL GLAZE 0 5% 1/8W	
R1251	1-216-089-91	METAL GLAZE 47K 5% 1/10W	
R1252	1-216-065-00	METAL GLAZE 4.7K 5% 1/10W	
R1253	1-216-089-91	METAL GLAZE 47K 5% 1/10W	
R1254	1-216-065-00	METAL GLAZE 4.7K 5% 1/10W	
R1255	1-216-089-91	METAL GLAZE 47K 5% 1/10W	
R1256	1-216-065-00	METAL GLAZE 4.7K 5% 1/10W	
R1257	1-216-089-91	METAL GLAZE 47K 5% 1/10W	
R1258	1-216-065-00	METAL GLAZE 4.7K 5% 1/10W	
R1259	1-216-089-91	METAL GLAZE 47K 5% 1/10W	
R1260	1-216-065-00	METAL GLAZE 4.7K 5% 1/10W	
R1261	1-216-089-91	METAL GLAZE 47K 5% 1/10W	
R1262	1-216-065-00	METAL GLAZE 4.7K 5% 1/10W	
R1263	1-216-089-91	METAL GLAZE 47K 5% 1/10W	
R1264	1-216-065-00	METAL GLAZE 4.7K 5% 1/10W	
R1265	1-216-089-91	METAL GLAZE 47K 5% 1/10W	
R1266	1-216-065-00	METAL GLAZE 4.7K 5% 1/10W	
R1267	1-216-089-91	METAL GLAZE 47K 5% 1/10W	
R1268	1-216-065-00	METAL GLAZE 4.7K 5% 1/10W	
R1269	1-216-089-91	METAL GLAZE 47K 5% 1/10W	
R1270	1-216-065-00	METAL GLAZE 4.7K 5% 1/10W	
R1271	1-216-033-00	METAL GLAZE 220 5% 1/10W	
R1272	1-216-033-00	METAL GLAZE 220 5% 1/10W	
R3201	1-216-033-00	METAL GLAZE 220 5% 1/10W	
R3202	1-216-033-00	METAL GLAZE 220 5% 1/10W	
R3203	1-216-041-00	METAL GLAZE 470 5% 1/10W	
R3204	1-216-041-00	METAL GLAZE 470 5% 1/10W	
R3205	1-216-070-00	METAL GLAZE 7.5K 5% 1/10W	
R3206	1-216-089-91	METAL GLAZE 47K 5% 1/10W	
R3207	1-216-077-00	METAL GLAZE 15K 5% 1/10W	
R3208	1-216-070-00	METAL GLAZE 7.5K 5% 1/10W	
R3209	1-216-089-91	METAL GLAZE 47K 5% 1/10W	
R3210	1-216-077-00	METAL GLAZE 15K 5% 1/10W	
R3211	1-216-294-00	METAL GLAZE 10M 5% 1/8W	
R3212	1-216-081-00	METAL GLAZE 22K 5% 1/10W	
R3213	1-216-081-00	METAL GLAZE 22K 5% 1/10W	
R3214	1-216-049-00	METAL GLAZE 1K 5% 1/10W	
R3215	1-216-049-00	METAL GLAZE 1K 5% 1/10W	

REF.NO.	PART NO.	DESCRIPTION	REMARK
R3216	1-216-049-00	METAL GLAZE 1K 5% 1/10W	
R3217	1-216-097-00	METAL GLAZE 100K 5% 1/10W	
R3218	1-216-198-91	METAL GLAZE 1K 5% 1/8W	
R3219	1-216-198-91	METAL GLAZE 1K 5% 1/8W	
R3220	1-216-699-11	METAL CHIP 100K 0.50% 1/10W	
R3221	1-216-077-00	METAL GLAZE 15K 5% 1/10W	
R3222	1-216-071-00	METAL GLAZE 8.2K 5% 1/10W	
R3223	1-216-109-00	METAL GLAZE 330K 5% 1/10W	
R3224	1-216-077-00	METAL GLAZE 15K 5% 1/10W	
R3225	1-216-079-00	METAL GLAZE 18K 5% 1/10W	
R3226	1-216-077-00	METAL GLAZE 15K 5% 1/10W	
R3227	1-216-220-00	METAL GLAZE 8.2K 5% 1/8W	
R3228	1-216-013-00	METAL GLAZE 33 5% 1/10W	
R3229	1-216-067-00	METAL GLAZE 5.6K 5% 1/10W	
R3230	1-216-079-00	METAL GLAZE 18K 5% 1/10W	
R3231	1-216-071-00	METAL GLAZE 8.2K 5% 1/10W	
R3232	1-216-070-00	METAL GLAZE 7.5K 5% 1/10W	
R3233	1-216-071-00	METAL GLAZE 8.2K 5% 1/10W	
R3234	1-216-097-00	METAL GLAZE 100K 5% 1/10W	
R3235	1-216-097-00	METAL GLAZE 100K 5% 1/10W	
R3236	1-216-097-00	METAL GLAZE 100K 5% 1/10W	
R3237	1-216-295-00	METAL GLAZE 0 5% 1/10W	
R3238	1-216-295-00	METAL GLAZE 0 5% 1/10W	
R3239	1-216-081-00	METAL GLAZE 22K 5% 1/10W	
R3240	1-216-296-91	METAL GLAZE 0 5% 1/8W	
R3241	1-216-121-00	METAL GLAZE 1M 5% 1/10W	
R3242	1-216-081-00	METAL GLAZE 22K 5% 1/10W	
R3243	1-216-081-00	METAL GLAZE 22K 5% 1/10W	
R3244	1-216-097-00	METAL GLAZE 100K 5% 1/10W	
R3245	1-216-097-00	METAL GLAZE 100K 5% 1/10W	
R3246	1-216-081-00	METAL GLAZE 22K 5% 1/10W	
R3247	1-216-109-00	METAL GLAZE 330K 5% 1/10W	
R3248	1-216-033-00	METAL GLAZE 220 5% 1/10W	
R3249	1-216-033-00	METAL GLAZE 220 5% 1/10W	
R3250	1-216-089-91	METAL GLAZE 47K 5% 1/10W	
R3253	1-216-083-00	METAL GLAZE 27K 5% 1/10W	
R3254	1-216-083-00	METAL GLAZE 27K 5% 1/10W	
R3255	1-216-089-91	METAL GLAZE 47K 5% 1/10W	
R3256	1-216-083-00	METAL GLAZE 27K 5% 1/10W	
R3257	1-216-083-00	METAL GLAZE 27K 5% 1/10W	
R3258	1-216-089-91	METAL GLAZE 47K 5% 1/10W	
R3259	1-216-097-00	METAL GLAZE 100K 5% 1/10W	
R3260	1-216-109-00	METAL GLAZE 330K 5% 1/10W	
R3261	1-216-097-00	METAL GLAZE 100K 5% 1/10W	
R3262	1-216-097-00	METAL GLAZE 100K 5% 1/10W	
R3263	1-216-081-00	METAL GLAZE 22K 5% 1/10W	
R3264	1-216-049-00	METAL GLAZE 1K 5% 1/10W	
R3265	1-216-295-00	METAL GLAZE 0 5% 1/10W	
R3266	1-216-295-00	METAL GLAZE 0 5% 1/10W	
R3267	1-216-097-00	METAL GLAZE 100K 5% 1/10W	
R3268	1-216-295-00	METAL GLAZE 0 5% 1/10W	
R3270	1-216-089-91	METAL GLAZE 47K 5% 1/10W	
R3271	1-216-295-00	METAL GLAZE 0 5% 1/10W	
R3272	1-216-295-00	METAL GLAZE 0 5% 1/10W	
R3275	1-216-295-00	METAL GLAZE 0 5% 1/10W	
R3277	1-216-295-00	METAL GLAZE 0 5% 1/10W	
R3278	1-216-238-91	METAL GLAZE 47K 5% 1/8W	
R3288	1-216-033-00	METAL GLAZE 220 5% 1/10W	
R3289	1-216-033-00	METAL GLAZE 220 5% 1/10W	
R3290	1-216-033-00	METAL GLAZE 220 5% 1/10W	

A3 (KV-A2941A/A2941B KV-A2941D/A2941K)

REF.NO.	PART NO.	DESCRIPTION			REMARK
R3291	1-216-033-00	METAL GLAZE	220	5%	1/10W
R3292	1-216-025-00	METAL GLAZE	100	5%	1/10W
R3293	1-216-025-00	METAL GLAZE	100	5%	1/10W
R3294	1-216-089-91	METAL GLAZE	47K	5%	1/10W
R3295	1-216-089-91	METAL GLAZE	47K	5%	1/10W
R3296	1-216-089-91	METAL GLAZE	47K	5%	1/10W
R3297	1-216-089-91	METAL GLAZE	47K	5%	1/10W
R3298	1-247-807-31	CARBON	100	5%	1/4W
R3299	1-216-049-00	METAL GLAZE	1K	5%	1/10W
R3300	1-216-049-00	METAL GLAZE	1K	5%	1/10W
R3301	1-216-073-00	METAL GLAZE	10K	5%	1/10W
R3302	1-216-073-00	METAL GLAZE	10K	5%	1/10W
R3303	1-216-073-00	METAL GLAZE	10K	5%	1/10W
R3304	1-216-073-00	METAL GLAZE	10K	5%	1/10W
R3307	1-216-049-00	METAL GLAZE	1K	5%	1/10W
R3308	1-216-246-91	METAL GLAZE	100K	5%	1/8W
R3309	1-216-097-00	METAL GLAZE	100K	5%	1/10W
R3310	1-216-081-00	METAL GLAZE	22K	5%	1/10W
		< CRYSTAL >			
X3201	1-567-505-11	OSCILLATOR, CRYSTAL			
**********					
	*A-1630-252-A	A3 BOARD, COMPLETE (KV-A2943E)			
		**********			
	*A-1630-219-A	A3 BOARD, COMPLETE (KV-A2942U)			
		**********			
		< FILTER >			
BP1101	1-239-047-11	FILTER, BAND PASS (KV-A2943E)			
	1-236-238-11	FILTER, BAND PASS (KV-A2942U)			
CF1101	1-409-333-00	TRAP, CERAMIC (6.0MHZ) (KV-A2942U)			
		< CAPACITOR >			
C1101	1-126-101-11	ELECT	100MF	20%	16V
C1102	1-126-101-11	ELECT	100MF	20%	16V
C1103	1-163-077-91	CERAMIC CHIP	0.1MF		50V
C1104	1-163-077-00	CERAMIC CHIP	0.1MF	10%	25V
C1105	1-164-489-11	CERAMIC CHIP	0.22MF	10%	16V
C1106	1-163-383-11	CERAMIC CHIP	180PF	5%	50V
C1107	1-163-009-11	CERAMIC CHIP	0.001MF	10%	50V
C1108	1-163-059-00	CERAMIC CHIP	0.01MF		50V
C1109	1-163-033-00	CERAMIC CHIP	0.022MF		50V
C1110	1-164-336-11	CERAMIC CHIP	0.33MF		25V
C1111	1-163-009-11	CERAMIC CHIP	0.001MF	10%	50V
C1112	1-164-161-11	CERAMIC CHIP	0.0022MF	10%	50V
C1113	1-124-477-11	ELECT	47MF	20%	16V
C1114	1-163-038-00	CERAMIC CHIP	0.1MF		25V
C1115	1-124-477-11	ELECT	47MF	20%	16V
C1116	1-106-228-00	MYLAR	0.22MF	10%	100V
C1117	1-163-081-00	CERAMIC CHIP	0.22MF		25V
C1118	1-163-113-00	CERAMIC CHIP	68PF	5%	50V
C1119	1-163-129-00	CERAMIC CHIP	330PF	5%	50V
C1120	1-163-193-00	CERAMIC CHIP	330PF	5%	50V
C1121	1-163-113-00	CERAMIC CHIP	68PF	5%	50V
C1122	1-163-081-00	CERAMIC CHIP	0.22MF		25V
C1123	1-106-228-00	MYLAR	0.22MF	10%	100V
C1124	1-124-477-11	ELECT	47MF	20%	16V
C1125	1-124-477-11	ELECT	47MF	20%	16V
C1126	1-163-077-00	CERAMIC CHIP	0.1MF	10%	25V

A3 (KV-A2943E KV-A2942U)

REF.NO.	PART NO.	DESCRIPTION			REMARK
C1127	1-163-038-00	CERAMIC CHIP	0.1MF		25V
C1128	1-124-477-11	ELECT	47MF	20%	16V
C1129	1-163-038-00	CERAMIC CHIP	0.1MF		25V
C1130	1-163-205-00	CERAMIC CHIP	0.001MF	10%	50V
C1131	1-163-059-00	CERAMIC CHIP	0.01MF		50V
C1132	1-163-038-00	CERAMIC CHIP	0.1MF		25V
C1133	1-124-907-11	ELECT	10MF	20%	50V
C1134	1-163-009-11	CERAMIC CHIP	0.001MF	10%	50V
C1135	1-163-038-00	CERAMIC CHIP	0.1MF		25V
C1136	1-163-117-00	CERAMIC CHIP	100PF	5%	50V
C1137	1-163-038-00	CERAMIC CHIP	0.1MF		25V
C1138	1-163-105-00	CERAMIC CHIP	33PF	5%	50V
C1139	1-163-105-00	CERAMIC CHIP	33PF	5%	50V
C1140	1-163-117-00	CERAMIC CHIP	100PF	5%	50V
C1141	1-163-205-00	CERAMIC CHIP	0.001MF	5%	50V
C1142	1-163-057-00	CERAMIC CHIP	0.0068MF		50V
C1143	1-163-003-11	CERAMIC CHIP	330PF	10%	50V
C1144	1-163-121-00	CERAMIC CHIP	150PF	5%	50V
C1145	1-163-121-00	CERAMIC CHIP	150PF	5%	50V
C1146	1-163-038-00	CERAMIC CHIP	0.1MF		25V
C1147	1-124-477-11	ELECT	47MF	20%	16V
C1148	1-164-161-11	CERAMIC CHIP	0.0022MF	10%	50V
C1149	1-124-477-11	ELECT	47MF	20%	16V
C1150	1-163-038-00	CERAMIC CHIP	0.1MF		25V
C1151	1-163-038-00	CERAMIC CHIP	0.1MF		25V
C1152	1-124-477-11	ELECT	47MF	20%	16V
C1153	1-163-087-00	CERAMIC CHIP	4PF	0.25PF	50V
C1154	1-163-038-00	CERAMIC CHIP	0.1MF		25V
C1155	1-124-477-11	ELECT	47MF	20%	16V
C1156	1-163-009-11	CERAMIC CHIP	0.001MF	10%	50V
C1157	1-163-009-11	CERAMIC CHIP	0.001MF	10%	50V
C1158	1-163-038-00	CERAMIC CHIP	0.1MF		25V
C1159	1-163-243-11	CERAMIC CHIP	47PF	5% (KV-A2942U)	50V
C1251	1-163-009-11	CERAMIC CHIP	0.001MF	10%	50V
C1252	1-163-010-11	CERAMIC CHIP	0.0012MF	10%	50V
C1253	1-163-014-00	CERAMIC CHIP	0.0027MF	10%	50V
C1254	1-163-014-00	CERAMIC CHIP	0.0027MF	10%	50V
C1255	1-164-232-11	CERAMIC CHIP	0.01MF	10%	50V
C1256	1-163-022-00	CERAMIC CHIP	0.012MF	10%	50V
C1257	1-163-986-00	CERAMIC CHIP	0.027MF	10%	25V
C1258	1-163-986-00	CERAMIC CHIP	0.027MF	10%	25V
C1259	1-164-004-11	CERAMIC CHIP	0.1MF	10%	25V
C1260	1-164-348-11	CERAMIC CHIP	0.12MF	10%	25V
C1261	1-163-009-11	CERAMIC CHIP	0.001MF	10%	50V
C1262	1-163-010-11	CERAMIC CHIP	0.0012MF	10%	50V
C1263	1-163-014-00	CERAMIC CHIP	0.0027MF	10%	50V
C1264	1-163-014-00	CERAMIC CHIP	0.0027MF	10%	50V
C1265	1-164-232-11	CERAMIC CHIP	0.01MF	10%	50V
C1266	1-163-022-00	CERAMIC CHIP	0.012MF	10%	50V
C1267	1-163-986-00	CERAMIC CHIP	0.027MF	10%	25V
C1268	1-163-986-00	CERAMIC CHIP	0.027MF	10%	25V
C1269	1-164-004-11	CERAMIC CHIP	0.1MF	10%	25V
C1270	1-164-348-11	CERAMIC CHIP	0.12MF	10%	25V
C1271	1-124-916-11	ELECT	22MF	20%	50V
C1272	1-124-910-11	ELECT	47MF	20%	50V
C3201	1-164-004-11	CERAMIC CHIP	0.1MF	10%	25V
C3202	1-164-004-11	CERAMIC CHIP	0.1MF	10%	25V
C3203	1-164-004-11	CERAMIC CHIP	0.1MF	10%	25V
C3204	1-137-128-91	FILM	0.022MF	5%	63V

A3 (KV-A2943E KV-A2942U)

REF.NO.	PART NO.	DESCRIPTION			REMARK
C3205	1-137-128-91	FILM	0.022MF	5%	63V
C3206	1-136-165-00	FILM	0.1MF	5%	50V
C3207	1-136-187-11	FILM	0.047MF	5%	63V
C3208	1-163-137-00	CERAMIC CHIP	680PF	5%	50V
C3209	1-136-165-00	FILM	0.1MF	5%	50V
C3210	1-163-137-00	CERAMIC CHIP	680PF	5%	50V
C3211	1-136-187-11	FILM	0.047MF	5%	63V
C3212	1-124-907-11	ELECT	10MF	20%	50V
C3213	1-124-907-11	ELECT	10MF	20%	50V
C3214	1-136-165-00	FILM	0.1MF	5%	50V
C3215	1-136-165-00	FILM	0.1MF	5%	50V
C3216	1-124-907-11	ELECT	10MF	20%	50V
C3217	1-124-907-11	ELECT	10MF	20%	50V
C3218	1-137-368-11	FILM	0.0047MF	5%	50V
C3219	1-124-916-11	ELECT	22MF	20%	63V
C3220	1-164-004-11	CERAMIC CHIP	0.1MF	10%	25V
C3221	1-136-169-00	FILM	0.22MF	5%	50V
C3222	1-124-927-11	ELECT	4.7MF	20%	50V
C3223	1-124-927-11	ELECT	4.7MF	20%	50V
C3224	1-136-169-00	FILM	0.22MF	5%	50V
C3225	1-136-169-00	FILM	0.22MF	5%	50V
C3226	1-136-169-00	FILM	0.22MF	5%	50V
C3227	1-136-175-00	FILM	0.68MF	5%	50V
C3228	1-163-133-00	CERAMIC CHIP	470PF	5%	50V
C3229	1-137-368-11	FILM	0.0047MF	5%	50V
C3230	1-136-187-11	FILM	0.047MF	5%	63V
C3231	1-124-911-11	ELECT	220MF	20%	50V
C3232	1-124-927-11	ELECT	4.7MF	20%	50V
C3233	1-136-015-00	CERAMIC CHIP	0.0033MF		50V
C3234	1-163-133-00	CERAMIC CHIP	470PF	5%	50V
C3235	1-163-036-00	CERAMIC CHIP	0.068MF		50V
C3236	1-164-004-11	CERAMIC CHIP	0.1MF	10%	25V
C3237	1-164-004-11	CERAMIC CHIP	0.1MF	10%	25V
C3238	1-124-126-00	ELECT	47MF	20%	10V
C3239	1-163-036-00	CERAMIC CHIP	0.068MF		50V
C3240	1-163-133-00	CERAMIC CHIP	470PF	5%	50V
C3241	1-163-018-00	CERAMIC CHIP	0.0056MF	10%	50V
C3242	1-163-018-00	CERAMIC CHIP	0.0056MF	10%	50V
C3243	1-163-038-00	CERAMIC CHIP	0.1MF		25V
C3244	1-124-477-11	ELECT	47MF	20%	16V
C3245	1-163-237-11	CERAMIC CHIP	27PF	5%	50V
C3246	1-163-237-11	CERAMIC CHIP	27PF	5%	50V
C3247	1-163-038-00	CERAMIC CHIP	0.1MF		25V
C3248	1-124-477-11	ELECT	47MF	20%	16V
C3250	1-163-038-00	CERAMIC CHIP	0.1MF		25V
C3251	1-163-105-00	CERAMIC CHIP	33PF	5%	50V
C3252	1-124-910-11	ELECT	47MF	20%	50V
C3253	1-163-038-00	CERAMIC CHIP	0.1MF		25V
C3255	1-163-105-00	CERAMIC CHIP	33PF	5%	50V
C3256	1-163-038-00	CERAMIC CHIP	0.1MF		25V
C3257	1-137-437-11	FILM	0.0056MF	5%	50V
C3258	1-124-907-11	ELECT	10MF	20%	50V
C3259	1-126-101-11	ELECT	100MF	20%	16V
C3260	1-163-077-91	CERAMIC CHIP	0.1MF		50V
C3261	1-124-907-11	ELECT	10MF	20%	50V
C3263	1-124-907-11	ELECT	10MF	20%	50V
C3264	1-124-907-11	ELECT	10MF	20%	50V
C3265	1-124-907-11	ELECT	10MF	20%	50V
C3266	1-124-907-11	ELECT	10MF	20%	50V
C3267	1-130-772-00	FILM	0.22MF	5%	63V

REF.NO.	PART NO.	DESCRIPTION			REMARK
C3272	1-163-038-00	CERAMIC CHIP	0.1MF		25V
C3273	1-163-011-11	CERAMIC CHIP	0.0015MF	10%	50V
C3274	1-124-910-11	ELECT	47MF	20%	50V
C3275	1-163-011-11	CERAMIC CHIP	0.0015MF	10%	50V
C3276	1-163-809-11	CERAMIC CHIP	0.047MF	10%	25V
C3277	1-163-809-11	CERAMIC CHIP	0.047MF	10%	25V
C3278	1-163-023-00	CERAMIC CHIP	0.015MF	10%	50V
C3279	1-163-023-00	CERAMIC CHIP	0.015MF	10%	50V
C3280	1-163-133-00	CERAMIC CHIP	470PF	5%	50V
C3281	1-164-005-11	CERAMIC CHIP	0.47MF		25V
C3282	1-163-133-00	CERAMIC CHIP	470PF	5%	50V
C3283	1-164-005-11	CERAMIC CHIP	0.47MF		25V
C3284	1-164-005-11	CERAMIC CHIP	0.47MF		25V
C3285	1-164-005-11	CERAMIC CHIP	0.47MF		25V
C3286	1-124-907-11	ELECT	10MF	20%	50V
C3287	1-164-005-11	CERAMIC CHIP	0.47MF		25V
C3288	1-124-907-11	ELECT	10MF	20%	50V
C3289	1-124-907-11	ELECT	10MF	20%	50V
C3290	1-163-038-00	CERAMIC CHIP	0.1MF		25V

< CONNECTOR >

CN0201	1-695-300-11	CONNECTOR, BOARD TO BOARD 20P	
CN0227	*1-564-509-11	PLUG, CONNECTOR 6P	
CN0246	*1-564-506-11	PLUG, CONNECTOR 3P	
CN0248	*1-564-507-11	PLUG, CONNECTOR 4P	

< DIODE >

D1101	8-719-914-44	DIODE DAP202K	
D1102	8-719-027-70	DIODE 1SV217-TPH3	
D1103	8-719-820-71	DIODE 1SV214	
D3201	8-719-110-14	DIODE RD9.1ESB3	

< FERRITE BEAD >

FB1101	1-410-396-41	FERRITE BEAD INDUCTOR 0.45UH	
FB1102	1-410-396-41	FERRITE BEAD INDUCTOR 0.45UH	
FB1103	1-410-396-41	FERRITE BEAD INDUCTOR 0.45UH	
FB1104	1-410-396-41	FERRITE BEAD INDUCTOR 0.45UH	
FB1105	1-410-396-41	FERRITE BEAD INDUCTOR 0.45UH	

< IC >

IC1101	8-759-511-88	IC TDA8732	
IC1102	8-759-184-28	IC SAA7282-ZP	
IC1251	8-759-257-64	IC TDA7317	
IC3201	8-759-267-99	IC M69032P	
IC3202	8-759-300-71	IC HD14053BFP	
IC3203	8-752-069-79	IC CXA1875M-T4	
IC3204	8-759-909-71	IC BA4558F	
IC3205	8-759-266-65	IC TDA6622-5	
IC3206	8-759-633-83	IC M50198P	

< COIL >

L1101	1-408-405-00	INDUCTOR	4.7UH
L1102	1-408-405-00	INDUCTOR	4.7UH
L1103	1-410-119-11	INDUCTOR	1MMH
L1104	1-410-119-11	INDUCTOR	1MMH
L1105	1-408-411-00	INDUCTOR	15UH (KV-A2942U)
L1251	1-408-421-00	INDUCTOR	100UH
L3201	1-408-421-00	INDUCTOR	100UH

< TRANSISTOR >

Q1101	8-729-920-74	TRANSISTOR 2SC2412K-QR

A3 (KV-A2943E KV-A2942U)

REF.NO.	PART NO.	DESCRIPTION	REMARK
Q1102	8-729-920-74	TRANSISTOR 2SC2412K-QR	
Q1103	8-729-920-74	TRANSISTOR 2SC2412K-QR	
Q1104	8-729-920-74	TRANSISTOR 2SC2412K-QR	
Q1105	8-729-920-74	TRANSISTOR 2SC2412K-QR	
Q1106	8-729-920-74	TRANSISTOR 2SC2412K-QR	
Q1107	8-729-920-74	TRANSISTOR 2SC2412K-QR	
Q1108	8-729-920-74	TRANSISTOR 2SC2412K-QR	
Q1251	8-729-920-74	TRANSISTOR 2SC2412K-QR	
Q1252	8-729-920-74	TRANSISTOR 2SC2412K-QR	
Q3203	8-729-216-22	TRANSISTOR 2SA1162-G	
Q3205	8-729-920-74	TRANSISTOR 2SC2412K-QR	
Q3206	8-729-920-74	TRANSISTOR 2SC2412K-QR	
Q3207	8-729-216-22	TRANSISTOR 2SA1162-G	
Q3208	8-729-920-74	TRANSISTOR 2SC2412K-QR	
Q3209	8-729-920-74	TRANSISTOR 2SC2412K-QR	
		< RESISTOR >	
JR3201	1-216-295-91	METAL GLAZE 0 5% 1/10W	
JR3202	1-216-295-91	METAL GLAZE 0 5% 1/10W	
JR3203	1-216-295-91	METAL GLAZE 0 5% 1/10W	
JR3204	1-216-295-91	METAL GLAZE 0 5% 1/10W	
JR3206	1-216-295-91	METAL GLAZE 0 5% 1/10W	
JR3208	1-216-296-91	METAL GLAZE 0 5% 1/8W	
JR3209	1-216-296-91	METAL GLAZE 0 5% 1/8W	
JR3210	1-216-296-91	METAL GLAZE 0 5% 1/8W	
JR3211	1-216-296-91	METAL GLAZE 0 5% 1/8W	
JR3212	1-216-296-91	METAL GLAZE 0 5% 1/8W	
R1101	1-216-188-00	METAL GLAZE 390 5% 1/8W	
R1102	1-216-049-00	METAL GLAZE 1K 5% 1/10W	
R1103	1-216-049-00	METAL GLAZE 1K 5% 1/10W	
R1104	1-216-041-00	METAL GLAZE 470 5% 1/10W	
R1105	1-216-005-00	METAL GLAZE 15 5% 1/10W	
R1106	1-216-185-11	METAL GLAZE 300 5% 1/8W	
R1107	1-216-042-00	METAL GLAZE 510 5% 1/10W	
R1108	1-216-063-00	METAL GLAZE 3.9K 5% 1/10W	
R1109	1-216-202-00	METAL GLAZE 1.5K 5% 1/8W	
R1110	1-216-196-00	METAL GLAZE 820 5% 1/8W	
R1111	1-216-041-00	METAL GLAZE 470 5% 1/10W	
R1112	1-216-051-00	METAL GLAZE 1.2K 5% 1/10W	
R1113	1-216-001-00	METAL GLAZE 10 5% 1/10W	
R1114	1-216-105-00	METAL GLAZE 220K 5% 1/10W	
R1115	1-216-121-00	METAL GLAZE 1M 5% 1/10W	
R1116	1-216-049-00	METAL GLAZE 1K 5% 1/10W	
R1117	1-216-097-00	METAL GLAZE 100K 5% 1/10W	
R1118	1-216-097-00	METAL GLAZE 100K 5% 1/10W	
R1119	1-216-073-00	METAL GLAZE 10K 5% 1/10W	
R1120	1-216-232-00	METAL GLAZE 27K 5% 1/8W	
R1121	1-216-081-00	METAL GLAZE 22K 5% 1/10W	
R1122	1-216-158-00	METAL GLAZE 22 5% 1/8W	
R1123	1-216-158-00	METAL GLAZE 22 5% 1/8W	
R1124	1-216-089-91	METAL GLAZE 47K 5% 1/10W	
R1125	1-216-097-00	METAL GLAZE 100K 5% 1/10W	
R1126	1-216-218-00	METAL GLAZE 6.8K 5% 1/8W	
R1127	1-216-097-00	METAL GLAZE 100K 5% 1/10W	
R1128	1-216-089-91	METAL GLAZE 47K 5% 1/10W	
R1129	1-216-089-91	METAL GLAZE 47K 5% 1/10W	
R1130	1-216-246-91	METAL GLAZE 100K 5% 1/8W	
R1131	1-216-218-00	METAL GLAZE 6.8K 5% 1/8W	
R1132	1-216-097-00	METAL GLAZE 100K 5% 1/10W	
R1133	1-216-089-91	METAL GLAZE 47K 5% 1/10W	

REF.NO.	PART NO.	DESCRIPTION	REMARK
R1134	1-216-212-00	METAL GLAZE 3.9K 5% 1/8W	
R1135	1-216-081-00	METAL GLAZE 22K 5% 1/10W	
R1136	1-216-081-00	METAL GLAZE 22K 5% 1/10W	
R1137	1-216-095-00	METAL GLAZE 82K 5% 1/10W	
R1138	1-216-097-00	METAL GLAZE 100K 5% 1/10W	
R1139	1-216-005-00	METAL GLAZE 15 5% 1/10W	
R1140	1-216-061-00	METAL GLAZE 3.3K 5% 1/10W	
R1141	1-216-061-00	METAL GLAZE 3.3K 5% 1/10W	
R1142	1-216-033-00	METAL GLAZE 220 5% 1/10W	
R1143	1-216-049-00	METAL GLAZE 1K 5% 1/10W	
R1144	1-216-049-00	METAL GLAZE 1K 5% 1/10W	
R1145	1-216-001-00	METAL GLAZE 10 5% 1/10W	
R1146	1-216-049-00	METAL GLAZE 1K 5% 1/10W	
R1147	1-216-045-00	METAL GLAZE 680 5% 1/10W	
R1148	1-216-049-00	METAL GLAZE 1K 5% 1/10W	
R1149	1-216-001-00	METAL GLAZE 10 5% 1/10W	
R1150	1-216-045-00	METAL GLAZE 680 5% 1/10W	
R1151	1-216-049-00	METAL GLAZE 1K 5% 1/10W	
R1152	1-216-049-00	METAL GLAZE 1K 5% 1/10W	
R1153	1-216-049-00	METAL GLAZE 1K 5% 1/10W	
R1154	1-216-041-00	METAL GLAZE 470 5% 1/10W	
R1251	1-216-089-91	METAL GLAZE 47K 5% 1/10W	
R1252	1-216-065-00	METAL GLAZE 4.7K 5% 1/10W	
R1253	1-216-089-91	METAL GLAZE 47K 5% 1/10W	
R1254	1-216-065-00	METAL GLAZE 4.7K 5% 1/10W	
R1255	1-216-089-91	METAL GLAZE 47K 5% 1/10W	
R1256	1-216-065-00	METAL GLAZE 4.7K 5% 1/10W	
R1257	1-216-089-91	METAL GLAZE 47K 5% 1/10W	
R1258	1-216-065-00	METAL GLAZE 4.7K 5% 1/10W	
R1259	1-216-089-91	METAL GLAZE 47K 5% 1/10W	
R1260	1-216-065-00	METAL GLAZE 4.7K 5% 1/10W	
R1261	1-216-089-91	METAL GLAZE 47K 5% 1/10W	
R1262	1-216-065-00	METAL GLAZE 4.7K 5% 1/10W	
R1263	1-216-089-91	METAL GLAZE 47K 5% 1/10W	
R1264	1-216-065-00	METAL GLAZE 4.7K 5% 1/10W	
R1265	1-216-089-91	METAL GLAZE 47K 5% 1/10W	
R1266	1-216-065-00	METAL GLAZE 4.7K 5% 1/10W	
R1267	1-216-089-91	METAL GLAZE 47K 5% 1/10W	
R1268	1-216-065-00	METAL GLAZE 4.7K 5% 1/10W	
R1269	1-216-089-91	METAL GLAZE 47K 5% 1/10W	
R1270	1-216-065-00	METAL GLAZE 4.7K 5% 1/10W	
R1271	1-216-033-00	METAL GLAZE 220 5% 1/10W	
R1272	1-216-033-00	METAL GLAZE 220 5% 1/10W	
R3201	1-216-033-00	METAL GLAZE 220 5% 1/10W	
R3202	1-216-033-00	METAL GLAZE 220 5% 1/10W	
R3203	1-216-041-00	METAL GLAZE 470 5% 1/10W	
R3204	1-216-041-00	METAL GLAZE 470 5% 1/10W	
R3205	1-216-070-00	METAL GLAZE 7.5K 5% 1/10W	
R3206	1-216-089-91	METAL GLAZE 47K 5% 1/10W	
R3207	1-216-077-00	METAL GLAZE 15K 5% 1/10W	
R3208	1-216-070-00	METAL GLAZE 7.5K 5% 1/10W	
R3209	1-216-089-91	METAL GLAZE 47K 5% 1/10W	
R3210	1-216-077-00	METAL GLAZE 15K 5% 1/10W	
R3211	1-216-294-00	METAL GLAZE 10M 5% 1/8W	
R3212	1-216-081-00	METAL GLAZE 22K 5% 1/10W	
R3213	1-216-081-00	METAL GLAZE 22K 5% 1/10W	
R3214	1-216-049-00	METAL GLAZE 1K 5% 1/10W	
R3215	1-216-049-00	METAL GLAZE 1K 5% 1/10W	
R3216	1-216-049-00	METAL GLAZE 1K 5% 1/10W	
R3217	1-216-097-00	METAL GLAZE 100K 5% 1/10W	

A3 (KV-A2943E / KV-A2942U) A

REF.NO.	PART NO.	DESCRIPTION				REMARK
R3218	1-216-198-91	METAL GLAZE	1K	5%	1/8W	
R3219	1-216-198-91	METAL GLAZE	1K	5%	1/8W	
R3220	1-216-699-11	METAL CHIP	100K	0.50%	1/10W	
R3221	1-216-077-00	METAL GLAZE	15K	5%	1/10W	
R3222	1-216-071-00	METAL GLAZE	8.2K	5%	1/10W	
R3223	1-216-109-00	METAL GLAZE	330K	5%	1/10W	
R3224	1-216-077-00	METAL GLAZE	15K	5%	1/10W	
R3225	1-216-079-00	METAL GLAZE	18K	5%	1/10W	
R3226	1-216-077-00	METAL GLAZE	15K	5%	1/10W	
R3227	1-216-220-00	METAL GLAZE	8.2K	5%	1/8W	
R3228	1-216-013-00	METAL GLAZE	33	5%	1/10W	
R3229	1-216-067-00	METAL GLAZE	5.6K	5%	1/10W	
R3230	1-216-079-00	METAL GLAZE	18K	5%	1/10W	
R3231	1-216-071-00	METAL GLAZE	8.2K	5%	1/10W	
R3232	1-216-070-00	METAL GLAZE	7.5K	5%	1/10W	
R3233	1-216-071-00	METAL GLAZE	8.2K	5%	1/10W	
R3234	1-216-097-00	METAL GLAZE	100K	5%	1/10W	
R3235	1-216-097-00	METAL GLAZE	100K	5%	1/10W	
R3236	1-216-097-00	METAL GLAZE	100K	5%	1/10W	
R3237	1-216-295-91	METAL GLAZE	0	5%	1/10W	
R3238	1-216-295-91	METAL GLAZE	0	5%	1/10W	
R3239	1-216-057-00	METAL GLAZE	2.2K	5%	1/10W	
R3240	1-216-296-91	METAL GLAZE	0	5%	1/8W	
R3241	1-216-121-00	METAL GLAZE	1M	5%	1/10W	
R3242	1-216-081-00	METAL GLAZE	22K	5%	1/10W	
R3243	1-216-081-00	METAL GLAZE	22K	5%	1/10W	
R3244	1-216-097-00	METAL GLAZE	100K	5%	1/10W	
R3245	1-216-097-00	METAL GLAZE	100K	5%	1/10W	
R3246	1-216-081-00	METAL GLAZE	22K	5%	1/10W	
R3247	1-216-109-00	METAL GLAZE	330K	5%	1/10W	
R3248	1-216-033-00	METAL GLAZE	220	5%	1/10W	
R3249	1-216-033-00	METAL GLAZE	220	5%	1/10W	
R3250	1-216-089-91	METAL GLAZE	47K	5%	1/10W	
R3253	1-216-083-00	METAL GLAZE	27K	5%	1/10W	
R3254	1-216-083-00	METAL GLAZE	27K	5%	1/10W	
R3255	1-216-089-91	METAL GLAZE	47K	5%	1/10W	
R3256	1-216-083-00	METAL GLAZE	27K	5%	1/10W	
R3257	1-216-083-00	METAL GLAZE	27K	5%	1/10W	
R3258	1-216-089-91	METAL GLAZE	47K	5%	1/10W	
R3259	1-216-097-00	METAL GLAZE	100K	5%	1/10W	
R3260	1-216-109-00	METAL GLAZE	330K	5%	1/10W	
R3261	1-216-097-00	METAL GLAZE	100K	5%	1/10W	
R3262	1-216-097-00	METAL GLAZE	100K	5%	1/10W	
R3263	1-216-081-00	METAL GLAZE	22K	5%	1/10W	
R3264	1-216-049-00	METAL GLAZE	1K	5%	1/10W	
R3265	1-216-295-91	METAL GLAZE	0	5%	1/10W	
R3266	1-216-295-91	METAL GLAZE	0	5%	1/10W	
R3267	1-216-097-00	METAL GLAZE	100K	5%	1/10W	
R3268	1-216-295-91	METAL GLAZE	0	5%	1/10W	
R3270	1-216-089-91	METAL GLAZE	47K	5%	1/10W	
R3271	1-216-295-91	METAL GLAZE	0	5%	1/10W	
R3272	1-216-295-91	METAL GLAZE	0	5%	1/10W	
R3275	1-216-295-91	METAL GLAZE	0	5%	1/10W	
R3277	1-216-295-91	METAL GLAZE	0	5%	1/10W	
R3278	1-216-238-91	METAL GLAZE	47K	5%	1/8W	
R3288	1-216-033-00	METAL GLAZE	220	5%	1/10W	
R3289	1-216-033-00	METAL GLAZE	220	5%	1/10W	
R3290	1-216-033-00	METAL GLAZE	220	5%	1/10W	
R3291	1-216-033-00	METAL GLAZE	220	5%	1/10W	
R3292	1-216-025-00	METAL GLAZE	100	5%	1/10W	
R3293	1-216-025-00	METAL GLAZE	100	5%	1/10W	
R3294	1-216-089-91	METAL GLAZE	47K	5%	1/10W	
R3295	1-216-089-91	METAL GLAZE	47K	5%	1/10W	
R3296	1-216-089-91	METAL GLAZE	47K	5%	1/10W	
R3297	1-216-089-91	METAL GLAZE	47K	5%	1/10W	
R3298	1-247-807-31	CARBON	100	5%	1/4W	
R3299	1-216-049-00	METAL GLAZE	1K	5%	1/10W	
R3300	1-216-049-00	METAL GLAZE	1K	5%	1/10W	
R3301	1-216-073-00	METAL GLAZE	10K	5%	1/10W	
R3302	1-216-073-00	METAL GLAZE	10K	5%	1/10W	
R3303	1-216-073-00	METAL GLAZE	10K	5%	1/10W	
R3304	1-216-073-00	METAL GLAZE	10K	5%	1/10W	
R3307	1-216-049-00	METAL GLAZE	1K	5%	1/10W	
R3308	1-216-246-91	METAL GLAZE	100K	5%	1/8W	
R3309	1-216-097-00	METAL GLAZE	100K	5%	1/10W	
R3310	1-216-081-00	METAL GLAZE	22K	5%	1/10W	

< CRYSTAL >

X1101	1-579-689-21	VIBRATOR, CRYSTAL
X1102	1-579-282-21	VIBRATOR, CRYSTAL (KV-A2943E)
	1-579-283-11	VIBRATOR, CRYSTAL (KV-A2942U)
X3201	1-567-505-11	OSCILLATOR, CRYSTAL

****

	*A-1632-218-A	A BOARD, COMPLETE (KV-A2941A/A2941D/ ********** A2941K)
	*A-1632-222-A	A BOARD, COMPLETE (KV-A2941B) **********
	*A-1632-221-A	A BOARD, COMPLETE (KV-A2943E) **********
	*A-1632-192-A	A BOARD, COMPLETE (KV-A2942U) **********
	4-200-001-01	HOLDER, IC
	4-201-023-01	SPACER, INSULATING
	4-812-134-00	RIVET NYLON, 3.5

< CAPACITOR >

C071	1-126-108-11	ELECT	56MF	20%	16V
C072	1-124-120-11	ELECT	220MF	20%	16V
C074	1-163-001-11	CERAMIC CHIP	220PF	10%	50V
C102	1-126-103-11	ELECT	470MF	20%	16V
C103	1-163-031-11	CERAMIC CHIP	0.01MF		50V
C104	1-124-477-11	ELECT	47MF	20%	16V
C105	1-124-916-11	ELECT	22MF	20%	50V
C106	1-124-927-11	ELECT	4.7MF	20%	50V
C110	1-124-478-11	ELECT	100MF	20%	25V
C120	1-163-031-11	CERAMIC CHIP	0.01MF		50V
C201	1-130-489-00	FILM	0.033MF	5%	50V
C202	1-130-489-00	FILM	0.033MF	5%	50V
C203	1-164-005-11	CERAMIC CHIP	0.47MF		25V
C204	1-164-005-11	CERAMIC CHIP	0.47MF		25V
C205	1-124-907-11	ELECT	10MF	20%	50V
C206	1-164-161-11	CERAMIC CHIP	0.0022MF	10%	50V
C207	1-137-613-11	FILM	0.0018MF	2%	100V
C208	1-164-005-11	CERAMIC CHIP	0.47MF		25V
C209	1-164-005-11	CERAMIC CHIP	0.47MF		25V
C210	1-164-005-11	CERAMIC CHIP	0.47MF		25V
C213	1-163-023-00	CERAMIC CHIP	0.015MF	10%	50V
C214	1-163-023-00	CERAMIC CHIP	0.015MF	10%	50V
C215	1-163-809-11	CERAMIC CHIP	0.047MF	10%	25V

REF.NO.	PART NO.	DESCRIPTION		REMARK
C216	1-163-809-11	CERAMIC CHIP 0.047MF	10%	25V
C217	1-124-925-11	ELECT 2.2MF	20%	50V
C218	1-124-925-11	ELECT 2.2MF	20%	50V
C219	1-163-011-11	CERAMIC CHIP 0.0015MF	10%	50V
C220	1-163-011-11	CERAMIC CHIP 0.0015MF	10%	50V
C221	1-124-925-11	ELECT 2.2MF	20%	50V
C222	1-124-925-11	ELECT 2.2MF	20%	50V
C223	1-136-177-00	FILM 1MF	5%	50V
C224	1-136-177-00	FILM 1MF	5%	50V
C225	1-164-182-11	CERAMIC CHIP 0.0033MF	10%	50V
C226	1-163-007-11	CERAMIC CHIP 680PF	10%	50V
C227	1-124-907-11	ELECT 10MF	20%	50V
C228	1-124-907-11	ELECT 10MF	20%	50V
C229	1-124-478-11	ELECT 100MF	20%	25V
C230	1-124-478-11	ELECT 100MF	20%	25V
C231	1-164-346-11	CERAMIC CHIP 1MF		16V
C232	1-163-009-11	CERAMIC CHIP 0.001MF	10%	50V
C233	1-163-009-11	CERAMIC CHIP 0.001MF	10%	50V
C234	1-164-161-11	CERAMIC CHIP 0.0022MF	10%	50V
C235	1-130-772-00	FILM 0.22MF	5%	63V
C236	1-124-618-11	ELECT 2200MF	20%	35V
C237	1-124-618-11	ELECT 2200MF	20%	35V
C238	1-164-161-11	CERAMIC CHIP 0.0022MF	10%	50V
C239	1-130-772-00	FILM 0.22MF	5%	63V
C240	1-124-916-11	ELECT 22MF	20%	50V
C241	1-124-916-11	ELECT 22MF	20%	50V
C242	1-124-903-11	ELECT 1MF	20%	50V
C244	1-164-346-11	CERAMIC CHIP 1MF		16V
		(KV-A2941A/A2941B/A2941D/A2943E/A2941K)		
	1-164-232-11	CERAMIC CHIP 0.01MF	10%	50V
			(KV-A2942U)	
C248	1-163-185-00	CERAMIC CHIP 150PF	5%	50V
C249	1-163-129-00	CERAMIC CHIP 330PF	5%	50V
C251	1-124-282-00	ELECT 22MF	20%	16V
C254	1-163-133-00	CERAMIC CHIP 470PF	5%	50V
C255	1-163-133-00	CERAMIC CHIP 470PF	5%	50V
C256	1-163-133-00	CERAMIC CHIP 470PF	5%	50V
C257	1-163-133-00	CERAMIC CHIP 470PF	5%	50V
C299	1-164-337-11	CERAMIC CHIP 2.2MF		16V
		(KV-A2941A/A2941D/A2943E/A2941K/A2942U)		
	1-164-346-11	CERAMIC CHIP 1MF		16V
			(KV-A2941B)	
C301	1-163-038-00	CERAMIC CHIP 0.1MF		25V
C302	1-163-038-00	CERAMIC CHIP 0.1MF		25V
C303	1-164-337-11	CERAMIC CHIP 2.2MF		16V
C304	1-164-004-11	CERAMIC CHIP 0.1MF	10%	25V
C305	1-163-096-00	CERAMIC CHIP 13PF	5%	50V
C306	1-163-097-00	CERAMIC CHIP 15PF	5%	50V
C307	1-163-017-00	CERAMIC CHIP 0.0047MF	10%	50V
C308	1-163-809-11	CERAMIC CHIP 0.047MF	10%	25V
C309	1-164-004-11	CERAMIC CHIP 0.1MF	10%	25V
C310	1-163-038-00	CERAMIC CHIP 0.1MF		25V
C311	1-163-038-00	CERAMIC CHIP 0.1MF		25V
C312	1-124-477-11	ELECT 47MF	20%	16V
C313	1-163-077-91	CERAMIC CHIP 0.1MF		50V
C314	1-163-038-00	CERAMIC CHIP 0.1MF		25V
C315	1-124-477-11	ELECT 47MF	20%	16V
C316	1-163-077-91	CERAMIC CHIP 0.1MF		50V
C317	1-163-103-00	CERAMIC CHIP 27PF	5%	50V
C318	1-163-103-00	CERAMIC CHIP 27PF	5%	50V

REF.NO.	PART NO.	DESCRIPTION		REMARK
C319	1-163-038-00	CERAMIC CHIP 0.1MF		25V
C320	1-124-477-11	ELECT 47MF	20%	16V
C321	1-163-038-00	CERAMIC CHIP 0.1MF		25V
C322	1-124-916-11	ELECT 22MF	20%	50V
C323	1-163-135-00	CERAMIC CHIP 560PF	5%	50V
C324	1-124-477-11	ELECT 47MF	20%	16V
C325	1-163-111-00	CERAMIC CHIP 56PF	5%	50V
C333	1-102-228-00	CERAMIC 470PF	10%	500V
				(KV-A2941B)
C341	1-163-077-00	CERAMIC CHIP 0.1MF	10%	25V
C342	1-163-077-00	CERAMIC CHIP 0.1MF	10%	25V
C343	1-164-004-11	CERAMIC CHIP 0.1MF	10%	25V
C344	1-162-638-11	CERAMIC CHIP 1MF		16V
C345	1-164-346-11	CERAMIC CHIP 1MF		16V
C346	1-124-916-11	ELECT 22MF	20%	50V
C347	1-162-638-11	CERAMIC CHIP 1MF		16V
C348	1-164-346-11	CERAMIC CHIP 1MF		16V
C349	1-164-346-11	CERAMIC CHIP 1MF		16V
C350	1-124-907-11	ELECT 10MF	20%	50V
C351	1-124-443-00	ELECT 100MF	20%	10V
C353	1-164-346-11	CERAMIC CHIP 1MF		16V
C354	1-164-346-11	CERAMIC CHIP 1MF		16V
C355	1-162-638-11	CERAMIC CHIP 1MF		16V
C356	1-164-489-11	CERAMIC CHIP 0.22MF	10%	16V
C357	1-164-299-11	CERAMIC CHIP 0.22MF	10%	25V
C358	1-164-299-11	CERAMIC CHIP 0.22MF	10%	25V
C359	1-124-907-11	ELECT 10MF	20%	50V
C360	1-163-105-00	CERAMIC CHIP 33PF	5%	50V
C361	1-163-101-00	CERAMIC CHIP 22PF	5%	50V
C362	1-130-772-00	FILM 0.22MF	5%	63V
C363	1-124-907-11	ELECT 10MF	20%	50V
C365	1-124-120-11	ELECT 220MF	20%	16V
C366	1-124-903-11	ELECT 1MF	20%	50V
C369	1-163-117-00	CERAMIC CHIP 100PF	5%	50V
C401	1-164-005-11	CERAMIC CHIP 0.47MF		16V
C402	1-104-792-51	ELECT 33MF	20%	16V
C403	1-162-637-11	CERAMIC CHIP 0.47MF		16V
C411	1-164-005-11	CERAMIC CHIP 0.47MF		25V
C412	1-164-005-11	CERAMIC CHIP 0.47MF		25V
C421	1-124-477-11	ELECT 47MF	20%	16V
C422	1-124-477-11	ELECT 47MF	20%	16V
C423	1-101-004-00	CERAMIC 0.01MF		50V
C424	1-163-129-00	CERAMIC CHIP 330PF	5%	50V
C425	1-163-129-00	CERAMIC CHIP 330PF	5%	50V
C426	1-124-477-11	ELECT 47MF	20%	16V
C427	1-164-346-11	CERAMIC CHIP 1MF		16V
C428	1-164-346-11	CERAMIC CHIP 1MF		16V
C429	1-124-119-00	ELECT 330MF	20%	16V
C574	1-163-117-00	CERAMIC CHIP 100PF	5%	50V
C575	1-164-299-11	CERAMIC CHIP 0.22MF	10%	25V
C576	1-163-075-00	CERAMIC CHIP 0.047MF	10%	25V
C581	1-163-031-11	CERAMIC CHIP 0.01MF		50V
C582	1-124-916-11	ELECT 22MF	20%	50V
C583	1-163-133-00	CERAMIC CHIP 470PF	5%	50V
C585	1-163-009-11	CERAMIC CHIP 0.001MF	10%	50V
C586	1-163-063-00	CERAMIC CHIP 0.022MF	10%	50V
C587	1-124-903-11	ELECT 1MF	20%	50V
C588	1-164-346-11	CERAMIC CHIP 1MF		16V
C589	1-124-478-11	ELECT 100MF	20%	25V
C590	1-124-916-11	ELECT 22MF	20%	50V

The components identified by shading and marked ⚠ are critical for safety.
Replace only with the part number specified.

A

REF.NO.	PART NO.	DESCRIPTION			REMARK
C591	1-124-925-11	ELECT	2.2MF	20%	50V
C592	1-163-017-00	CERAMIC CHIP	0.0047MF	10%	50V
C593	1-164-182-11	CERAMIC CHIP	0.0033MF	10%	50V
C595	1-163-109-00	CERAMIC CHIP	47PF	5%	50V
C599	1-164-232-11	CERAMIC CHIP	0.01MF	10%	50V
C644	1-124-916-11	ELECT	22MF	20%	50V
C681	1-124-478-11	ELECT	100MF	20%	25V
C682	1-126-516-11	ELECT	120MF	20%	16V
C683	1-124-478-11	ELECT	100MF	20%	25V
C685	1-124-478-11	ELECT	100MF	20%	25V
C686	1-163-038-00	CERAMIC CHIP	0.1MF		25V
C687	1-124-916-11	ELECT	22MF	20%	50V
		< FILTER >			
CF581	1-577-611-11	OSCILALTOR, CERAMIC			
		< CONNECTOR >			
CN0001	*1-568-880-51	PIN, CONNECTOR 5P			
CN0101	1-695-297-11	CONNECTOR, BOARD TO BOARD 20P			
CN0103	1-564-511-11	PLUG, CONNECTOR 8P			
CN0104	1-564-511-11	PLUG, CONNECTOR 8P			
CN0105	*1-568-880-51	PIN, CONNECTOR 5P			
CN0106	*1-568-880-51	PIN, CONNECTOR 5P			
CN0107	*1-568-879-11	PIN, CONNECTOR 4P			
CN0108	*1-568-878-51	PIN, CONNECTOR 3P			
CN0109	1-695-299-11	CONNECTOR, BOARD TO BOARD 50P			
CN0110	*1-568-879-11	PIN, CONNECTOR 4P			
CN0113	1-695-298-11	CONNECTOR, BOARD TO BOARD 40P			
CN0119	*1-568-879-11	PIN, CONNECTOR 4P			
CN0127	*1-564-509-11	PLUG, CONNECTOR 6P			
CN0149	*1-568-879-11	PIN, CONNECTOR 4P			
CN5108	*1-564-513-11	PLUG, CONNECTOR 10P			
		< DIODE >			
D068	8-719-914-44	DIODE DAP202K			
D069	8-719-914-44	DIODE DAP202K			
D071	8-719-109-89	DIODE RD5.6ESB2			
D073	8-719-109-89	DIODE RD5.6ESB2			
D075	8-719-914-43	DIODE DAN202K			
D077	8-719-914-43	DIODE DAN202K			
D078	8-719-109-89	DIODE RD5.6ESB2			
D079	8-719-109-89	DIODE RD5.6ESB2			
D101	8-719-982-27	DIODE MTZJ-33C			
D206	8-719-914-43	DIODE DAN202K			
D207	8-719-921-89	DIODE MTZJ-13C			
D208	8-719-901-33	DIODE 1SS133			
D209	8-719-901-33	DIODE 1SS133			
D210	8-719-901-33	DIODE 1SS133			
D211	8-719-901-33	DIODE 1SS133			
D212	8-719-901-33	DIODE 1SS133			
D213	8-719-914-43	DIODE DAN202K			
D214	8-719-914-42	DIODE DA204K			
D215	8-719-914-42	DIODE DA204K (KV-A2941B)			
D216	8-719-914-42	DIODE DA204K (KV-A2941B)			
D301	8-719-914-43	DIODE DAN202K			
D304	8-719-109-89	DIODE RD5.6ESB2			
D305	8-719-914-43	DIODE DAN202K			
D306	8-719-914-43	DIODE DAN202K			
D307	8-719-914-43	DIODE DAN202K			
D308	8-719-914-42	DIODE DA204K			

REF.NO.	PART NO.	DESCRIPTION	REMARK
D311	8-719-914-42	DIODE DA204K	
D312	8-719-914-44	DIODE DAP202K	
D313	8-719-914-43	DIODE DAN202K	
D314	8-719-914-43	DIODE DAN202K	
D381	8-719-110-03	DIODE RD7.5ESB2	
D401	8-719-921-69	DIODE MTZJ-9.1	
D403	8-719-921-69	DIODE MTZJ-9.1	
D405	8-719-921-69	DIODE MTZJ-9.1	
D406	8-719-921-69	DIODE MTZJ-9.1	
D407	8-719-921-69	DIODE MTZJ-9.1	
D571	8-719-914-42	DIODE DA204K	
D681	8-719-921-75	DIODE MTZN-10B	
D683	8-719-914-44	DIODE DAP202K	
		< IC >	
IC072	8-759-184-27	IC ST24C16CB1	
IC201	8-759-266-64	IC TDA6612-5 (KV-A2941A/A2941B/A2941D/A2943E/A2941K)	
	8-759-266-65	IC TDA6622-5	(KV-A2942U)
IC202	8-759-502-21	IC TDA2822M	
IC251	8-759-072-99	IC TDA2052	
IC261	8-759-072-99	IC TDA2052	
IC301	8-759-189-90	IC TDA9145/N2B	
IC302	8-759-084-91	IC TDA4661/V2	
IC304	8-752-056-54	IC CXA1587S	
IC401	8-752-068-46	IC CXA1855S	
IC402	8-759-073-00	IC TEA2114	
IC681	8-759-072-98	IC TDA8138A	
	4-202-373-01	SPRING, IC (IC681)	
IC684	8-759-701-59	IC NJM78M09FA	
IC685	8-759-510-52	IC TEA7605	
		< IF BLOCK >	
IFB101	1-466-733-11	IF BLOCK (IFH-389)	(KV-A2941A/A2941D/A2943E/A2941K)
	1-466-735-11	IF BLOCK (IFH-389F)	(KV-A2941B)
	1-466-734-11	IF BLOCK (IFH-395)	(KV-A2942U)
		< COIL >	
L101	1-412-546-41	INDUCTOR	560UH
L102	1-408-413-00	INDUCTOR	22UH
L201	1-407-500-00	INDUCTOR	4.7MMH
L307	1-408-405-00	INDUCTOR	4.7UH
L309	1-408-411-00	INDUCTOR	15UH
L575	1-408-397-00	INDUCTOR	1UH
L611	1-412-539-41	INDUCTOR	150UH
L681	1-412-539-41	INDUCTOR	150UH
		< IC LINK >	
PS681 ⚠	1-532-605-91	LINK, IC 0.4A (ICP-N10)	
PS682 ⚠	1-532-605-91	LINK, IC 0.4A (ICP-N10)	
		< TRANSISTOR >	
Q071	8-729-901-05	TRANSISTOR DTA124EK	
Q101	8-729-216-22	TRANSISTOR 2SA1162-G	
Q102	8-729-901-00	TRANSISTOR DTC124EK	
Q103	8-729-900-53	TRANSISTOR DTC114EK	
Q201	8-729-920-74	TRANSISTOR 2SC2412K-QR	
Q202	8-729-920-74	TRANSISTOR 2SC2412K-QR	
Q203	8-729-920-74	TRANSISTOR 2SC2412K-QR	

REF.NO.	PART NO.	DESCRIPTION	REMARK
Q204	8-729-216-22	TRANSISTOR 2SA1162-G	
Q205	8-729-216-22	TRANSISTOR 2SA1162-G	
Q206	8-729-216-22	TRANSISTOR 2SA1162-G	
Q207	8-729-920-74	TRANSISTOR 2SC2412K-QR	
Q209	8-729-920-74	TRANSISTOR 2SC2412K-QR	
Q210	8-729-920-74	TRANSISTOR 2SC2412K-QR	
Q303	8-729-216-22	TRANSISTOR 2SA1162-G	
Q304	8-729-900-53	TRANSISTOR DTC114EK	
Q306	8-729-216-22	TRANSISTOR 2SA1162-G	
Q308	8-729-216-22	TRANSISTOR 2SA1162-G	
Q309	8-729-931-02	TRANSISTOR 2SC2413KQ	
Q311	8-729-901-06	TRANSISTOR DTA144EK	
Q312	8-729-900-53	TRANSISTOR DTC114EK	
Q313	8-729-216-22	TRANSISTOR 2SA1162-G	
Q314	8-729-920-74	TRANSISTOR 2SC2412K-QR	
Q315	8-729-920-74	TRANSISTOR 2SC2412K-QR	
Q317	8-729-920-74	TRANSISTOR 2SC2412K-QR	
Q401	8-729-920-74	TRANSISTOR 2SC2412K-QR	
Q402	8-729-920-74	TRANSISTOR 2SC2412K-QR	
Q403	8-729-920-74	TRANSISTOR 2SC2412K-QR	
Q581	8-729-920-74	TRANSISTOR 2SC2412K-QR	
Q582	8-729-216-22	TRANSISTOR 2SA1162-G	
Q583	8-729-920-74	TRANSISTOR 2SC2412K-QR	
Q610	8-729-140-97	TRANSISTOR 2SB734-34	
Q681	8-729-109-53	TRANSISTOR 2SD795A-P	
Q682	8-729-900-53	TRANSISTOR DTC114EK	

< RESISTOR >

JR102	1-216-295-91	METAL GLAZE	0	5%	1/10W
JR104	1-216-295-91	METAL GLAZE	0	5%	1/10W
JR105	1-216-295-91	METAL GLAZE	0	5%	1/10W
JR107	1-216-295-91	METAL GLAZE	0	5%	1/10W
JR110	1-216-295-91	METAL GLAZE	0	5%	1/10W
JR111	1-216-295-91	METAL GLAZE	0	5%	1/10W
JR112	1-216-295-91	METAL GLAZE	0	5%	1/10W
JR113	1-216-295-91	METAL GLAZE	0	5%	1/10W
JR114	1-216-295-91	METAL GLAZE	0	5%	1/10W
JR115	1-216-295-91	METAL GLAZE	0	5%	1/10W
JR116	1-216-295-91	METAL GLAZE	0	5%	1/10W
JR117	1-216-295-91	METAL GLAZE	0	5%	1/10W
JR118	1-216-295-91	METAL GLAZE	0	5%	1/10W
JR119	1-216-295-91	METAL GLAZE	0	5%	1/10W
JR120	1-216-295-91	METAL GLAZE	0	5%	1/10W
JR121	1-216-295-91	METAL GLAZE	0	5%	1/10W
JR122	1-216-295-91	METAL GLAZE	0	5%	1/10W
JR123	1-216-295-91	METAL GLAZE	0	5%	1/10W
JR125	1-216-295-91	METAL GLAZE	0	5%	1/10W
JR126	1-216-295-91	METAL GLAZE	0	5%	1/10W
JR127	1-216-295-91	METAL GLAZE	0	5%	1/10W
JR128	1-216-295-91	METAL GLAZE	0	5%	1/10W
JR129	1-216-295-91	METAL GLAZE	0	5%	1/10W
JR130	1-216-295-91	METAL GLAZE	0	5%	1/10W
JR131	1-216-295-91	METAL GLAZE	0	5%	1/10W
JR132	1-216-295-91	METAL GLAZE	0	5%	1/10W
JR133	1-216-295-91	METAL GLAZE	0	5%	1/10W
JR134	1-216-295-91	METAL GLAZE	0	5%	1/10W
JR135	1-216-295-91	METAL GLAZE	0	5%	1/10W
JR136	1-216-295-91	METAL GLAZE	0	5%	1/10W
JR137	1-216-295-91	METAL GLAZE	0	5%	1/10W
JR138	1-216-296-91	METAL GLAZE	0	5%	1/8W
JR139	1-216-295-91	METAL GLAZE	0	5%	1/10W
JR140	1-216-295-91	METAL GLAZE	0	5%	1/10W
JR141	1-216-295-91	METAL GLAZE	0	5%	1/10W
JR142	1-216-295-91	METAL GLAZE	0	5%	1/10W
JR143	1-216-295-91	METAL GLAZE	0	5%	1/10W
JR144	1-216-295-91	METAL GLAZE	0	5%	1/10W
JR151	1-216-295-91	METAL GLAZE	0	5%	1/10W
JR152	1-216-295-91	METAL GLAZE	0	5%	1/10W
JR153	1-216-295-91	METAL GLAZE	0	5%	1/10W
JR201	1-216-296-91	METAL GLAZE	0	5%	1/8W
JR202	1-216-296-91	METAL GLAZE	0	5%	1/8W
JR203	1-216-296-91	METAL GLAZE	0	5%	1/8W
JR204	1-216-296-91	METAL GLAZE	0	5%	1/8W
JR205	1-216-296-91	METAL GLAZE	0	5%	1/8W
JR206	1-216-296-91	METAL GLAZE	0	5%	1/8W
JR207	1-216-296-91	METAL GLAZE	0	5%	1/8W
JR208	1-216-296-91	METAL GLAZE	0	5%	1/8W
JR209	1-216-296-91	METAL GLAZE	0	5%	1/8W
JR210	1-216-296-91	METAL GLAZE	0	5%	1/8W
JR211	1-216-296-91	METAL GLAZE	0	5%	1/8W
JR212	1-216-296-91	METAL GLAZE	0	5%	1/8W
JR213	1-216-296-91	METAL GLAZE	0	5%	1/8W
JR214	1-216-296-91	METAL GLAZE	0	5%	1/8W
JR215	1-216-296-91	METAL GLAZE	0	5%	1/8W
JR216	1-216-296-91	METAL GLAZE	0	5%	1/8W
JR217	1-216-296-91	METAL GLAZE	0	5%	1/8W
JR218	1-216-296-91	METAL GLAZE	0	5%	1/8W
JR219	1-216-296-91	METAL GLAZE	0	5%	1/8W
JR220	1-216-296-91	METAL GLAZE	0	5%	1/8W
JR221	1-216-296-91	METAL GLAZE	0	5%	1/8W
JR222	1-216-296-91	METAL GLAZE	0	5%	1/8W
JR223	1-216-296-91	METAL GLAZE	0	5%	1/8W
JR224	1-216-296-91	METAL GLAZE	0	5%	1/8W
JR225	1-216-296-91	METAL GLAZE	0	5%	1/8W
JR226	1-216-296-91	METAL GLAZE	0	5%	1/8W
JR227	1-216-296-91	METAL GLAZE	0	5%	1/8W
JR228	1-216-296-91	METAL GLAZE	0	5%	1/8W
JR230	1-216-296-91	METAL GLAZE	0	5%	1/8W
JR231	1-216-296-91	METAL GLAZE	0	5%	1/8W
JR232	1-216-296-91	METAL GLAZE	0	5%	1/8W
JR233	1-216-296-91	METAL GLAZE	0	5%	1/8W
JR234	1-216-296-91	METAL GLAZE	0	5%	1/8W
JR235	1-216-296-91	METAL GLAZE	0	5%	1/8W
JR236	1-216-296-91	METAL GLAZE	0	5%	1/8W
JR237	1-216-296-91	METAL GLAZE	0	5%	1/8W
JR238	1-216-296-91	METAL GLAZE	0	5%	1/8W
JR240	1-216-296-91	METAL GLAZE	0	5%	1/8W
JR241	1-216-296-91	METAL GLAZE	0	5%	1/8W
JR242	1-216-296-91	METAL GLAZE	0	5%	1/8W
JR243	1-216-295-91	METAL GLAZE	0	5%	1/10W
JR245	1-216-296-91	METAL GLAZE	0	5%	1/8W
JR247	1-216-296-91	METAL GLAZE	0	5%	1/8W
JR248	1-216-296-91	METAL GLAZE	0	5%	1/8W
JR250	1-216-296-91	METAL GLAZE	0	5%	1/8W
JR251	1-216-296-91	METAL GLAZE	0	5%	1/8W
JR252	1-216-296-91	METAL GLAZE	0	5%	1/8W
JR253	1-216-296-91	METAL GLAZE	0	5%	1/8W
JR254	1-216-296-91	METAL GLAZE	0	5%	1/8W
JR255	1-216-296-91	METAL GLAZE	0	5%	1/8W
JR258	1-216-296-91	METAL GLAZE	0	5%	1/8W

A

REF.NO.	PART NO.	DESCRIPTION				REMARK
JR271	1-216-295-91	METAL GLAZE	0	5%	1/10W	
JR272	1-216-295-91	METAL GLAZE	0	5%	1/10W	
R071	1-216-041-00	METAL GLAZE	470	5%	1/10W	
R072	1-216-033-00	METAL GLAZE	220	5%	1/10W	
R073	1-216-033-00	METAL GLAZE	220	5%	1/10W	
R074	1-216-198-91	METAL GLAZE	1K	5%	1/8W	
R076	1-216-057-00	METAL GLAZE	2.2K	5%	1/10W	
R077	1-216-025-00	METAL GLAZE	100	5%	1/10W	
R101	1-216-025-00	METAL GLAZE	100	5%	1/10W	
R102	1-216-049-00	METAL GLAZE	1K	5%	1/10W	
R103	1-216-059-00	METAL GLAZE	2.7K	5%	1/10W	
R105	1-216-073-00	METAL GLAZE	10K	5%	1/10W	
R108	1-216-230-00	METAL GLAZE	22K	5%	1/8W	
R115	1-216-210-00	METAL GLAZE	3.3K	5%	1/8W	
R201	1-216-653-11	METAL CHIP	1.2K	0.50%	1/10W	
R202	1-216-653-11	METAL CHIP	1.2K	0.50%	1/10W	
R203	1-216-067-00	METAL GLAZE	5.6K	5%	1/10W	
R204	1-216-091-00	METAL GLAZE	56K	5%	1/10W	
R205	1-216-071-00	METAL GLAZE	8.2K	5%	1/10W	
R206	1-216-071-00	METAL GLAZE	8.2K	5%	1/10W	
R207	1-216-057-00	METAL GLAZE	2.2K	5%	1/10W	
R208	1-216-057-00	METAL GLAZE	2.2K	5%	1/10W	
R209	1-249-377-11	CARBON	0.47	5%	1/4W	F
R210	1-247-734-11	CARBON	39	5%	1/2W	
R211	1-247-734-11	CARBON	39	5%	1/2W	
R212	1-216-049-00	METAL GLAZE	1K	5%	1/10W	
R213	1-216-073-00	METAL GLAZE	10K	5%	1/10W	
R214	1-216-049-00	METAL GLAZE	1K	5%	1/10W	
R215	1-216-073-00	METAL GLAZE	10K	5%	1/10W	
R216	1-216-049-00	METAL GLAZE	1K	5%	1/10W	
R217	1-216-045-00	METAL GLAZE	680	5%	1/10W	
R218	1-216-081-00	METAL GLAZE	22K	5%	1/10W	
R221	1-212-849-00	FUSIBLE	4.7	5%	1/4W	F
R222	1-216-049-00	METAL GLAZE	1K	5%	1/10W	
R223	1-216-045-00	METAL GLAZE	680	5%	1/10W	
R224	1-249-433-11	CARBON	22K	5%	1/4W	
R225	1-212-849-00	FUSIBLE	4.7	5%	1/4W	F
R226	1-249-412-11	CARBON	390	5%	1/4W	
R227	1-216-081-00	METAL GLAZE	22K	5%	1/10W	
R228	1-216-081-00	METAL GLAZE	22K	5%	1/10W	
R229	1-216-039-00	METAL GLAZE	390	5%	1/10W	
R230	1-216-246-91	METAL GLAZE	100K	5%	1/8W	
R231	1-216-097-00	METAL GLAZE	100K	5%	1/10W	
R232	1-216-081-00	METAL GLAZE	22K	5%	1/10W	
R233	1-216-071-00	METAL GLAZE	8.2K	5%	1/10W	
R234	1-216-077-00	METAL GLAZE	15K	5%	1/10W	
R235	1-216-073-00	METAL GLAZE	10K	5%	1/10W	
R236	1-216-081-00	METAL GLAZE	22K	5%	1/10W	
R237	1-216-025-00	METAL GLAZE	100	5%	1/10W	
R238	1-216-025-00	METAL GLAZE	100	5%	1/10W	
R241	1-216-065-00	METAL GLAZE	4.7K	5%	1/10W	
R242	1-216-214-00	METAL GLAZE	4.7K	5%	1/8W	
R244	1-216-069-00	METAL GLAZE	6.8K	5%	1/10W	
R245	1-216-089-91	METAL GLAZE	47K	5%	1/10W	
R246	1-216-097-00	METAL GLAZE	100K	5%	1/10W	
R247	1-216-073-00	METAL GLAZE	10K	5%	1/10W	
R248	1-216-073-00	METAL GLAZE	10K	5%	1/10W	
R249	1-216-045-00	METAL GLAZE	680	5%	1/10W	
R250	1-216-095-00	METAL GLAZE	82K	5%	1/10W	
R251	1-216-065-00	METAL GLAZE	4.7K	5%	1/10W	
R252	1-216-073-00	METAL GLAZE	10K	5%	1/10W	
R253	1-216-073-00	METAL GLAZE	10K	5%	1/10W	
R254	1-216-252-00	METAL GLAZE	180K	5%	1/8W	
R255	1-216-252-00	METAL GLAZE	180K	5%	1/8W	
R256	1-249-409-11	CARBON	220	5%	1/4W	
R257	1-249-409-11	CARBON	220	5%	1/4W	
R258	1-216-089-91	METAL GLAZE	47K	5%	1/10W	
R259	1-216-063-00	METAL GLAZE	3.9K	5%	1/10W	
R260	1-216-212-00	METAL GLAZE	3.9K	5%	1/8W	
R293	1-216-075-00	METAL GLAZE	12K	5%	1/10W	(KV-A2941B)
R295	1-216-295-91	METAL GLAZE	0	5%	1/10W	
R296	1-216-037-00	METAL GLAZE	330	5%	1/10W	(KV-A2941B)
R297	1-216-027-00	METAL GLAZE	120	5%	1/10W	(KV-A2941B)
R301	1-216-041-00	METAL GLAZE	470	5%	1/10W	
R302	1-216-041-00	METAL GLAZE	470	5%	1/10W	
R303	1-216-174-00	METAL GLAZE	100	5%	1/8W	
R304	1-216-174-00	METAL GLAZE	100	5%	1/8W	
R305	1-216-035-00	METAL GLAZE	270	5%	1/10W	
R306	1-216-035-00	METAL GLAZE	270	5%	1/10W	
R307	1-216-075-00	METAL GLAZE	12K	5%	1/10W	
R308	1-216-121-00	METAL GLAZE	1M	5%	1/10W	
R309	1-216-001-00	METAL GLAZE	10	5%	1/10W	
R310	1-216-001-00	METAL GLAZE	10	5%	1/10W	
R311	1-216-065-00	METAL GLAZE	4.7K	5%	1/10W	
R312	1-249-413-11	CARBON	470	5%	1/4W	
R313	1-216-081-00	METAL GLAZE	22K	5%	1/10W	
R314	1-249-409-11	CARBON	220	5%	1/4W	
R315	1-249-409-11	CARBON	220	5%	1/4W	
R316	1-216-085-00	METAL GLAZE	33K	5%	1/10W	
R318	1-216-041-00	METAL GLAZE	470	5%	1/10W	
R319	1-249-413-11	CARBON	470	5%	1/4W	
R322	1-216-041-00	METAL GLAZE	470	5%	1/10W	
R324	1-216-049-00	METAL GLAZE	1K	5%	1/10W	
R325	1-216-041-00	METAL GLAZE	470	5%	1/10W	
R326	1-216-295-91	METAL GLAZE	0	5%	1/10W	(KV-A2941B)
R328	1-216-025-00	METAL GLAZE	100	5%	1/10W	
R329	1-216-023-00	METAL GLAZE	82	5%	1/10W	
R330	1-216-053-00	METAL GLAZE	1.5K	5%	1/10W	
R331	1-216-097-00	METAL GLAZE	100K	5%	1/10W	
R333	1-216-182-00	METAL GLAZE	220	5%	1/8W	
R334	1-216-182-00	METAL GLAZE	220	5%	1/8W	
R336	1-216-029-00	METAL GLAZE	150	5%	1/10W	
R337	1-216-041-00	METAL GLAZE	470	5%	1/10W	
R338	1-216-035-00	METAL GLAZE	270	5%	1/10W	
R339	1-216-025-00	METAL GLAZE	100	5%	1/10W	
R340	1-216-025-00	METAL GLAZE	100	5%	1/10W	
R341	1-216-025-00	METAL GLAZE	100	5%	1/10W	
R342	1-216-033-00	METAL GLAZE	220	5%	1/10W	
R343	1-216-022-00	METAL GLAZE	75	5%	1/10W	
R344	1-216-022-00	METAL GLAZE	75	5%	1/10W	
R345	1-216-171-00	METAL GLAZE	75	5%	1/8W	
R346	1-216-022-00	METAL GLAZE	75	5%	1/10W	
R347	1-216-083-00	METAL GLAZE	27K	5%	1/10W	
R351	1-216-073-00	METAL GLAZE	10K	5%	1/10W	
R352	1-216-033-00	METAL GLAZE	220	5%	1/10W	
R354	1-216-033-00	METAL GLAZE	220	5%	1/10W	
R355	1-216-033-00	METAL GLAZE	220	5%	1/10W	

A IF (KV-A2941A/A2941D KV-A2943E/A2941K)

REF.NO.	PART NO.	DESCRIPTION			REMARK
R356	1-216-033-00	METAL GLAZE	220	5%	1/10W
R357	1-216-041-00	METAL GLAZE	470	5%	1/10W
R358	1-216-031-00	METAL GLAZE	180	5%	1/10W
R359	1-216-033-00	METAL GLAZE	220	5%	1/10W
R360	1-216-033-00	METAL GLAZE	220	5%	1/10W
R361	1-216-033-00	METAL GLAZE	220	5%	1/10W
R362	1-216-077-00	METAL GLAZE	15K	5%	1/10W
R366	1-216-236-11	METAL GLAZE	39K	5%	1/8W
R376	1-216-065-00	METAL GLAZE	4.7K	5%	1/10W
R377	1-216-051-00	METAL GLAZE	1.2K	5%	1/10W
R378	1-216-057-00	METAL GLAZE	2.2K	5%	1/10W
R379	1-216-206-00	METAL GLAZE	2.2K	5%	1/8W
R380	1-216-057-00	METAL GLAZE	2.2K	5%	1/10W
R381	1-216-164-00	METAL GLAZE	39	5%	1/8W
R382	1-216-164-00	METAL GLAZE	39	5%	1/8W
R383	1-216-164-00	METAL GLAZE	39	5%	1/8W
R385	1-216-085-00	METAL GLAZE	33K	5%	1/10W
R386	1-216-073-00	METAL GLAZE	10K	5%	1/10W
R387	1-216-065-00	METAL GLAZE	4.7K	5%	1/10W
R388	1-216-073-00	METAL GLAZE	10K	5%	1/10W
R389	1-216-071-00	METAL GLAZE	8.2K	5%	1/10W
R390	1-216-083-00	METAL GLAZE	27K	5%	1/10W
R391	1-216-069-00	METAL GLAZE	6.8K	5%	1/10W
R392	1-216-061-00	METAL GLAZE	3.3K	5%	1/10W
R393	1-216-073-00	METAL GLAZE	10K	5%	1/10W
R394	1-216-081-00	METAL GLAZE	22K	5%	1/10W
R395	1-216-091-00	METAL GLAZE	56K	5%	1/10W
R396	1-216-081-00	METAL GLAZE	22K	5%	1/10W
R401	1-216-171-00	METAL GLAZE	75	5%	1/8W
R402	1-216-158-00	METAL GLAZE	22	5%	1/8W
R403	1-216-025-00	METAL GLAZE	100	5%	1/10W
R404	1-216-158-00	METAL GLAZE	22	5%	1/8W
R405	1-216-025-00	METAL GLAZE	100	5%	1/10W
R406	1-216-158-00	METAL GLAZE	22	5%	1/8W
R407	1-216-025-00	METAL GLAZE	100	5%	1/10W
R408	1-216-093-00	METAL GLAZE	68K	5%	1/10W
R410	1-216-067-00	METAL GLAZE	5.6K	5%	1/10W
R411	1-216-067-00	METAL GLAZE	5.6K	5%	1/10W
R412	1-216-022-00	METAL GLAZE	75	5%	1/10W
R413	1-216-022-00	METAL GLAZE	75	5%	1/10W
R414	1-216-022-00	METAL GLAZE	75	5%	1/10W
R416	1-216-113-00	METAL GLAZE	470K	5%	1/10W
R417	1-216-067-00	METAL GLAZE	5.6K	5%	1/10W
R419	1-216-113-00	METAL GLAZE	470K	5%	1/10W
R420	1-216-067-00	METAL GLAZE	5.6K	5%	1/10W
R424	1-216-025-00	METAL GLAZE	100	5%	1/10W
R425	1-216-025-00	METAL GLAZE	100	5%	1/10W
R428	1-249-393-11	CARBON	10	5%	1/4W F
R574	1-216-041-00	METAL GLAZE	470	5%	1/10W
R575	1-216-186-00	METAL GLAZE	330	5%	1/8W
R577	1-216-089-91	METAL GLAZE	47K	5%	1/10W
R578	1-216-238-91	METAL GLAZE	47K	5%	1/8W
R580	1-216-651-11	METAL CHIP	1K	0.50%	1/10W
R581	1-216-033-00	METAL GLAZE	220	5%	1/10W
R582	1-216-037-00	METAL GLAZE	330	5%	1/10W
R583	1-216-053-00	METAL GLAZE	1.5K	5%	1/10W
R584	1-216-039-00	METAL GLAZE	390	5%	1/10W
R585	1-216-067-00	METAL GLAZE	5.6K	5%	1/10W
R586	1-216-047-00	METAL GLAZE	820	5%	1/10W
R587	1-216-047-00	METAL GLAZE	820	5%	1/10W
R588	1-216-101-00	METAL GLAZE	150K	5%	1/10W
R589	1-216-073-00	METAL GLAZE	10K	5%	1/10W
R590	1-216-049-00	METAL GLAZE	1K	5%	1/10W
R591	1-216-073-00	METAL GLAZE	10K	5%	1/10W
R592	1-216-232-00	METAL GLAZE	27K	5%	1/8W
R593	1-216-673-11	METAL CHIP	8.2K	0.50%	1/10W
R594	1-216-663-11	METAL CHIP	3.3K	0.50%	1/10W
R595	1-216-643-11	METAL CHIP	470	0.50%	1/10W
R596	1-216-067-00	METAL GLAZE	5.6K	5%	1/10W
R597	1-216-230-00	METAL GLAZE	22K	5%	1/8W
R598	1-216-053-00	METAL GLAZE	1.5K	5%	1/10W
R600	1-216-174-00	METAL GLAZE	100	5%	1/8W
R616	1-216-184-00	METAL GLAZE	270	5%	1/8W
R619	1-216-077-00	METAL GLAZE	15K	5%	1/10W
R628	1-249-413-11	CARBON	470	5%	1/4W
R632	1-216-065-00	METAL GLAZE	4.7K	5%	1/10W
R681	1-216-541-00	METAL OXIDE	4.3	5%	3W F
R682	1-249-415-11	CARBON	680	5%	1/4W
R683	1-216-073-00	METAL GLAZE	10K	5%	1/10W
R2219	1-216-174-00	METAL GLAZE	100	5%	1/8W
R2220	1-216-174-00	METAL GLAZE	100	5%	1/8W
R2221	1-216-174-00	METAL GLAZE	100	5%	1/8W
R2222	1-216-174-00	METAL GLAZE	100	5%	1/8W

< TUNER >

TU101	1-693-185-11	TUNER (UV916H) (KV-A2941A/A2941B/A2941D/A2943E/A2941K)
	1-693-184-11	TUNER (U944C) (KV-A2942U)

< CRYSTAL >

X301	1-567-504-11	OSCILLATOR, CRYSTAL
X302	1-567-505-11	OSCILLATOR, CRYSTAL

****

	1-466-733-11	IF BLOCK (IFH-389) (KV-A2941A/A2941D/ ********** A2943E/A2941K)

< CAPACITOR >

C101	1-163-121-00	CERAMIC CHIP	150PF	5%	50V
C102	1-164-222-11	CERAMIC CHIP	0.22MF		25V
C103	1-164-232-11	CERAMIC CHIP	0.01MF	10%	50V
C104	1-164-232-11	CERAMIC CHIP	0.01F	10%	50V
C105	1-164-004-11	CERAMIC CHIP	0.1MF	10%	25V
C106	1-124-477-11	ELECT	47MF	20%	16V
C107	1-164-004-11	CERAMIC CHIP	0.1MF	10%	25V
C108	1-164-004-11	CERAMIC CHIP	0.1MF	10%	25V
C109	1-164-232-11	CERAMIC CHIP	0.01F	10%	50V
C112	1-164-004-11	CERAMIC CHIP	0.1MF	10%	25V
C113	1-164-101-00	CERAMIC CHIP	22PF	5%	50V
C114	1-124-477-11	ELECT	47MF	20%	16V
C115	1-164-232-11	CERAMIC CHIP	0.01F	10%	50V
C116	1-164-346-11	CERAMIC CHIP	1MF		16V
C118	1-164-004-11	CERAMIC CHIP	0.1MF	10%	25V
C119	1-163-369-11	CERAMIC CHIP	47PFF	5%	25V
C121	1-163-235-11	CERAMOC CHIP	22PF	5%	50V
C122	1-164-239-11	CERAMIC CHIP	33PF	5%	50V
C123	1-163-235-11	CERAMIC CHIP	22PF	5%	50V
C124	1-164-004-11	CERAMIC CHIP	0.1MF	10%	25V
C130	1-216-295-00	METAL GLAZE	0	5%	1/10W

IF (KV-A2941A/A2941D KV-A2943E/A2941K)

REF.NO.	PART NO.	DESCRIPTION		REMARK
C131	1-163-093-00	CERAMIC CHIP 10PF	5%	50V
C133	1-124-477-11	ELECT 47MF	20%	16V
C152	1-164-337-11	CERAMIC CHIP 2.2MF		16V
C153	1-164-337-11	CERAMIC CHIP 2.2MF		16V
C154	1-164-337-11	CERAMIC CHIP 2.2MF		16V
C155	1-164-232-11	CERAMIC CHIP 0.01F	10%	50V
C156	1-124-477-11	ELECT 47MF	20%	16V
C161	1-164-117-00	CERAMIC CHIP 100PF	5%	50V
C162	1-164-222-11	CERAMIC CHIP 0.22MF		25V
C163	1-164-346-11	CERAMIC CHIP 1MF		16V
C164	1-163-141-00	CERAMIC CHIP 0.001MF	5%	50V
C165	1-164-232-11	CERAMIC CHIP 0.01F	10%	50V
C166	1-124-477-11	ELECT 47MF	20%	16V
C167	1-163-213-00	CERAMIC CHIP 0.0022MF	5%	50V
C168	1-164-346-11	CERAMIC CHIP 1MF		16V
C170	1-124-477-11	ELECT 47MF	20%	16V
C171	1-124-477-11	ELECT 47MF	20%	16V
C173	1-124-477-11	ELECT 47MF	20%	16V
		< FILTER >		
CF2	1-527-839-00	FILTER, CERAMIC		
CF3	1-527-840-00	FILTER, CERAMIC		
CF4	1-567-570-00	FILTER, CERAMIC		
SWF1	1-579-658-11	FILTER, SAWTOOTH WAVE		
		< CONNECTOR >		
CN1	1-750-173-11	PIN, CONNECTOR (PC BOARD) 10P		
CN2	1-750-173-11	PIN, CONNECTOR (PC BOARD) 10P		
		< TRIMMER >		
CT1	1-404-801-11	TRAP, CERAMIC		
		< DIODE >		
D161	8-719-400-18	DIODE MA152WK		
		< IC >		
IC1	8-759-070-76	IC M52308SP		
IC2	8-759-070-71	IC TDA9820		
IC3	8-759-514-54	IC BA7046		
		< COIL >		
L101	1-408-421-00	INDUCTOR 100UH		
L102	1-408-419-00	INDUCTOR 68UH		
L103	1-408-419-00	INDUCTOR 68UH		
L104	1-408-408-00	INDUCTOR 8.2UH		
L121	1-408-413-00	INDUCTOR 22UH		
L122	1-408-420-00	INDUCTOR 82UH		
L142	1-408-790-00	INDUCTOR 0.56UH		
L151	1-408-419-00	INDUCTOR 68UH		
L161	1-408-419-00	INDUCTOR 68UH		
		< TRANSISTOR >		
Q101	8-729-920-74	TRANSISTOR 2SC2412K-QR		
Q102	8-729-216-22	TRANSISTOR 2SA1162-G		
Q121	8-729-920-74	TRANSISTOR 2SC2412K-QR		
Q122	8-729-216-22	TRANSISTOR 2SA1162-G		
Q161	8-729-216-22	TRANSISTOR 2SA1162-G		
Q170	8-729-920-74	TRANSISTOR 2SC2412K-QR		
Q171	8-729-920-74	TRANSISTOR 2SC2412K-QR		
Q172	8-729-920-74	TRANSISTOR 2SC2412K-QR		
Q173	8-729-920-74	TRANSISTOR 2SC2412K-QR		
		< RESISTOR >		
JR2	1-216-295-00	METAL GLAZE 0	5%	1/10W
JR3	1-216-296-00	METAL GLAZE 0	5%	1/8W
JR4	1-216-295-00	METAL GLAZE 0	5%	1/10W
JR7	1-216-295-00	METAL GLAZE 0	5%	1/10W
JR8	1-216-295-00	METAL GLAZE 0	5%	1/10W
JR9	1-216-296-00	METAL GLAZE 0	5%	1/8W
JR11	1-216-296-00	METAL GLAZE 0	5%	1/8W
JR14	1-216-296-00	METAL GLAZE 0	5%	1/8W
JR16	1-216-295-00	METAL GLAZE 0	5%	1/10W
JR18	1-216-295-00	METAL GLAZE 0	5%	1/10W
JR19	1-216-296-00	METAL GLAZE 0	5%	1/8W
JR20	1-216-296-00	METAL GLAZE 0	5%	1/8W
JR21	1-216-296-00	METAL GLAZE 0	5%	1/8W
JR23	1-216-296-00	METAL GLAZE 0	5%	1/8W
JR24	1-216-296-00	METAL GLAZE 0	5%	1/8W
JR25	1-216-296-00	METAL GLAZE 0	5%	1/8W
JR29	1-216-296-00	METAL GLAZE 0	5%	1/8W
JR30	1-216-295-00	METAL GLAZE 0	5%	1/10W
JR33	1-216-295-00	METAL GLAZE 0	5%	1/10W
JR38	1-216-296-00	METAL GLAZE 0	5%	1/8W
JR39	1-216-296-00	METAL GLAZE 0	5%	1/8W
JR40	1-216-296-00	METAL GLAZE 0	5%	1/8
R101	1-216-075-00	METAL GLAZE 12K	5%	1/10W
R102	1-216-073-00	METAL GLAZE 10K	5%	1/10W
R103	1-216-057-00	METAL GLAZE 2.2K	5%	1/10W
R104	1-216-051-00	METAL GLAZE 1.2K	5%	1/10W
R106	1-216-049-00	METAL GLAZE 1K	5%	1/10W
R107	1-216-065-00	METAL GLAZE 4.7K	5%	1/10W
R108	1-216-065-00	METAL GLAZE 4.7K	5%	1/10W
R110	1-216-041-00	METAL GLAZE 470	5%	1/10W
R113	1-216-031-00	METAL GLAZE 180	5%	1/10W
R114	1-216-049-00	METAL GLAZE 1K	5%	1/10W
R115	1-216-027-00	METAL GLAZE 120	5%	1/10W
R116	1-216-101-00	METAL GLAZE 150K	5%	1/10W
R117	1-216-097-00	METAL GLAZE 100K	5%	1/10W
R118	1-216-117-00	METAL GLAZE 680K	5%	1/10W
R119	1-216-240-00	METAL GLAZE 56K	5%	1/8W
R120	1-216-075-00	METAL GLAZE 12K	5%	1/10W
R121	1-216-053-00	METAL GLAZE 1.5K	5%	1/10W
R122	1-216-061-00	METAL GLAZE 3.3K	5%	1/10W
R123	1-216-075-00	METAL GLAZE 12K	5%	1/10W
R124	1-216-041-00	METAL GLAZE 470	5%	1/10W
R125	1-216-041-00	METAL GLAZE 470	5%	1/10W
R127	1-216-047-00	METAL GLAZE 820	5%	1/10W
R130	1-216-049-00	METAL GLAZE 1K	5%	1/10W
R131	1-216-025-00	METAL GLAZE 100	5%	1/10W
R132	1-216-069-00	METAL GLAZE 6.8K	5%	1/10W
R133	1-216-061-00	METAL GLAZE 3.3K	5%	1/10W
R134	1-216-049-00	METAL GLAZE 1K	5%	1/10W
R135	1-216-198-00	METAL GLAZE 1K	5%	1/8W
R150	1-216-043-00	METAL GLAZE 560	5%	1/10W
R151	1-216-043-00	METAL GLAZE 560	5%	1/10W
R152	1-216-043-00	METAL GLAZE 560	5%	1/10W
R153	1-216-025-00	METAL GLAZE 100	5%	1/10W
R154	1-216-049-00	METAL GLAZE 1K	5%	1/10W
R155	1-216-051-00	METAL GLAZE 1.2K	5%	1/10W
R156	1-216-083-00	METAL GLAZE 27K	5%	1/10W

IF (KV-A2941A/A2941D KV-A2943E/A2941K) IF (KV-A2941B)

REF.NO.	PART NO.	DESCRIPTION			REMARK
R157	1-216-051-00	METAL GLAZE	1.2K	5%	1/10W
R159	1-216-107-00	METAL GLAZE	270K	5%	1/10W
R160	1-216-049-00	METAL GLAZE	1K	5%	1/10W
R161	1-216-755-11	METAL CHIP	130K	0.50%	1/10W
R162	1-216-073-00	METAL GLAZE	10K	5%	1/10W
R163	1-216-113-00	METAL GLAZE	470K	5%	1/10W
R164	1-216-113-00	METAL GLAZE	470K	5%	1/10W
R165	1-216-081-00	METAL GLAZE	22K	5%	1/10W
R166	1-216-049-00	METAL GLAZE	1K	5%	1/10W
R167	1-216-073-00	METAL GLAZE	10K	5%	1/10W
R168	1-216-113-00	METAL GLAZE	470K	5%	1/10W
R169	1-216-049-00	METAL GLAZE	1K	5%	1/10W
R170	1-216-083-00	METAL GLAZE	27K	5%	1/10W
R171	1-216-075-00	METAL GLAZE	12K	5%	1/10W
R172	1-216-095-00	METAL GLAZE	82K	5%	1/10W
R173	1-216-059-00	METAL GLAZE	2.7K	5%	1/10W
R174	1-216-057-00	METAL GLAZE	2.2K	5%	1/10W
R175	1-216-083-00	METAL GLAZE	27K	5%	1/10W
R176	1-216-075-00	METAL GLAZE	12K	5%	1/10W
R177	1-216-095-00	METAL GLAZE	82K	5%	1/10W
R178	1-216-059-00	METAL GLAZE	2.7K	5%	1/10W
R179	1-216-057-00	METAL GLAZE	2.2K	5%	1/10W
R180	1-216-037-00	METAL GLAZE	330	5%	1/10W
R181	1-216-037-00	METAL GLAZE	330	5%	1/10W
		< VARIABLE RESISTOR >			
RV1	1-241-121-11	RES, ADJ, CARBON 4.7K			
		< TRANSFORMER >			
T4	1-416-017-21	COIL			
T5	1-416-018-21	COIL			

****

1-466-735-11 IF BLOCK (IFH-389F) (KV-A2941B)
****

< CAPACITOR >

C1	1-163-017-00	CERAMIC CHIP	0.0047MF	10%	50V
C2	1-164-232-11	CERAMIC CHIP	0.01MF	10%	50V
C3	1-124-903-11	ELECT	1MF	20%	50V
C4	1-164-232-11	CERAMIC CHIP	0.01MF	10%	50V
C5	1-164-232-11	CERAMIC CHIP	0.01MF	10%	50V
C6	1-163-017-00	CERAMIC CHIP	0.0047MF	10%	50V
C7	1-164-232-11	CERAMIC CHIP	0.01MF	10%	50V
C8	1-163-017-00	CERAMIC CHIP	0.0047MF	10%	50V
C9	1-124-916-11	ELECT	22MF	20%	25V
C10	1-164-232-11	CERAMIC CHIP	0.01MF	10%	50V
C11	1-124-477-11	ELECT	47MF	20%	16V
C13	1-163-059-00	CERAMIC CHIP	0.01MF	10%	50V
C14	1-124-477-11	ELECT	47MF	20%	16V
C15	1-124-903-11	ELECT	1MF	20%	50V
C16	1-163-061-00	CERAMIC CHIP	0.015MF	10%	50V
C17	1-162-638-11	CERAMIC CHIP	1MF		16V
C18	1-162-638-11	CERAMIC CHIP	1MF		16V
C19	1-163-141-00	CERAMIC CHIP	0.001MF	5%	50V
C20	1-124-902-00	ELECT	0.47MF	20%	50V
C21	1-124-903-11	ELECT	1MF	20%	50V
C22	1-164-232-11	CERAMIC CHIP	0.01MF	10%	50V
C23	1-124-902-00	ELECT	0.47MF	20%	50V

REF.NO.	PART NO.	DESCRIPTION			REMARK
C24	1-164-506-11	CERAMIC CHIP	4.7MF		16V
C25	1-124-477-11	ELECT	47MF	20%	16V
C26	1-164-232-11	CERAMIC CHIP	0.01MF	10%	50V
C27	1-164-232-11	CERAMIC CHIP	0.01MF	10%	50V
C28	1-124-477-11	ELECT	47MF	20%	16V
C33	1-124-907-11	ELECT	10MF	20%	50V
C34	1-124-907-11	ELECT	10MF	20%	50V
C35	1-124-925-11	ELECT	2.2MF	20%	50V
C36	1-124-477-11	ELECT	47MF	20%	16V
C37	1-164-232-11	CERAMIC CHIP	0.01MF	10%	50V
C38	1-163-017-00	CERAMIC CHIP	0.0047MF	10%	50V
C40	1-164-232-11	CERAMIC CHIP	0.01MF	10%	50V
C71	1-124-477-11	ELECT	47MF	20%	16V
C72	1-164-232-11	CERAMIC CHIP	0.01MF	10%	50V
C80	1-124-477-11	ELECT	47MF	20%	16V
C83	1-124-477-11	ELECT	47MF	20%	16V
C84	1-124-477-11	ELECT	47MF	20%	16V
C85	1-124-477-11	ELECT	47MF	20%	16V
C86	1-124-477-11	ELECT	47MF	20%	16V
C87	1-124-477-11	ELECT	47MF	20%	16V
C91	1-163-229-11	CERAMIC CHIP	12PF	5%	50V
C95	1-164-337-11	CERAMIC CHIP	2.2MF		16V
C101	1-163-017-00	CERAMIC CHIP	0.0047MF	10%	50V
C102	1-163-017-00	CERAMIC CHIP	0.0047MF	10%	50V
C104	1-163-017-00	CERAMIC CHIP	0.0047MF	10%	50V
C105	1-163-017-00	CERAMIC CHIP	0.0047MF	10%	50V
C106	1-163-017-00	CERAMIC CHIP	0.0047MF	10%	50V
C119	1-163-369-11	CERAMIC CHIP	47PFF	5%	25V
C121	1-126-176-11	ELECT	220MF	20%	10V
C122	1-163-119-00	CERAMIC CHIP	120PF	5%	50V
C131	1-126-099-11	ELECT	2.2MF	20%	35V
		< FILTER >			
CF1	1-527-839-00	FILTER, CERAMIC			
CF2	1-567-569-11	FILTER, CERAMIC			
CF3	1-527-840-00	FILTER, CERAMIC			
CF4	1-567-570-11	FILTER, CERAMIC			
SWF1	1-579-662-11	FILTER, SURFACE WAVE			
SWF3	1-404-711-11	SAWF			
SWF4	1-579-660-11	FILTER, SAWTOOTH WAVE			
		< CONNECTOR >			
CN1	1-750-173-11	PIN, CONNECTOR (PC BOARD) 10!			
CN2	1-750-173-11	PIN, CONNECTOR (PC BOARD) 10!			
		< TRIMMER >			
CT1	1-404-801-11	TRAP, CERAMIC			
CT2	1-409-429-11	TRAP, CERAMIC			
CV1	1-141-245-00	CAP, TRIMMER			
CV1	1-141-245-00	CAP, TRIMMER			
CV3	1-141-304-21	TRIMMER, CERAMIC			
		< DIODE >			
D7	8-719-421-57	DIODE MA73-TX			
D8	8-719-421-57	DIODE MA73-TX			
D9	8-719-421-57	DIODE MA73-TX			
		< IC >			
IC1	8-759-070-75	IC M52312SP			
IC2	8-759-070-71	IC TDA9820			

IF (KV-A2941B)

REF.NO.	PART NO.	DESCRIPTION	REMARK
IC3	8-759-979-62	IC PCF8574	
		< COIL >	
L1	1-408-419-00	INDUCTOR 68UH	
L2	1-408-419-00	INDUCTOR 68UH	
L3	1-408-407-00	INDUCTOR 6.8UH	
L4	1-408-419-00	INDUCTOR 68UH	
L5	1-408-419-00	INDUCTOR 68UH	
L7	1-408-406-00	INDUCTOR 5.6UH	
L9	1-408-419-00	INDUCTOR 68UH	
L71	1-408-419-00	INDUCTOR 68UH	
L101	1-408-399-00	INDUCTOR 1.5UH	
L121	1-408-407-00	INDUCTOR 6.8UH	
		< TRANSISTOR >	
Q1	8-729-907-06	TRANSISTOR BF199-AMMO	
Q4	8-729-920-74	TRANSISTOR 2SC2412K-QR	
Q5	8-729-115-10	TRANSISTOR 2SK105A-10	
Q6	8-729-900-52	TRANSISTOR DTC114YK	
Q7	8-729-216-22	TRANSISTOR 2SA1162-G	
Q8	8-729-920-74	TRANSISTOR 2SC2412K-QR	
Q10	8-729-920-74	TRANSISTOR 2SC2412K-QR	
Q11	8-729-920-74	TRANSISTOR 2SC2412K-QR	
Q12	8-729-920-74	TRANSISTOR 2SC2412K-QR	
Q13	8-729-920-74	TRANSISTOR 2SC2412K-QR	
Q14	8-729-920-74	TRANSISTOR 2SC2412K-QR	
Q15	8-729-920-74	TRANSISTOR 2SC2412K-QR	
Q16	8-729-216-22	TRANSISTOR 2SA1162-G	
Q101	8-729-104-80	TRANSISTOR 2SC3355	
Q121	8-729-920-74	TRANSISTOR 2SC2412K-QR	
		< RESISTOR >	
JR2	1-216-295-00	METAL GLAZE 0 5% 1/10W	
JR3	1-216-296-00	METAL GLAZE 0 5% 1/8W	
JR5	1-216-296-00	METAL GLAZE 0 5% 1/8W	
R1	1-216-025-00	METAL GLAZE 100 5% 1/10W	
R2	1-216-065-00	METAL GLAZE 4.7K 5% 1/10W	
R3	1-216-065-00	METAL GLAZE 4.7K 5% 1/10W	
R4	1-216-041-00	METAL GLAZE 470 5% 1/10W	
R5	1-216-021-00	METAL GLAZE 68 5% 1/10W	
R6	1-216-055-00	METAL GLAZE 1.8K 5% 1/10W	
R8	1-216-051-00	METAL GLAZE 1.2K 5% 1/10W	
R9	1-216-069-00	METAL GLAZE 6.8K 5% 1/10W	
R10	1-216-071-00	METAL GLAZE 8.2K 5% 1/10W	
R11	1-216-059-00	METAL GLAZE 2.7K 5% 1/10W	
R24	1-216-280-00	METAL GLAZE 2.7M 5% 1/8W	
R25	1-216-057-00	METAL GLAZE 2.2K 5% 1/10W	
R26	1-216-061-00	METAL GLAZE 3.3K 5% 1/10W	
R27	1-216-266-00	METAL GLAZE 680K 5% 1/8W	
R28	1-216-075-00	METAL GLAZE 12K 5% 1/10W	
R29	1-216-035-00	METAL GLAZE 270 5% 1/10W	
R30	1-216-049-00	METAL GLAZE IK 5% 1/10W	
R31	1-216-017-00	METAL GLAZE 47 5% 1/10W	
R32	1-216-043-00	METAL GLAZE 560 5% 1/10W	
R33	1-216-037-00	METAL GLAZE 330 5% 1/10W	
R34	1-216-252-00	METAL GLAZE 180K 5% 1/8W	
R35	1-216-035-00	METAL GLAZE 270 5% 1/10W	
R36	1-216-029-00	METAL GLAZE 150 5% 1/10W	
R37	1-216-049-00	METAL GLAZE IK 5% 1/10W	
R38	1-216-099-00	METAL GLAZE 120K 5% 1/10W	
R39	1-216-089-00	METAL GLAZE 47K 5% 1/10W	
R40	1-216-049-00	METAL GLAZE IK 5% 1/10W	
R42	1-216-061-00	METAL GLAZE 3.3K 5% 1/10W	
R43	1-216-067-00	METAL GLAZE 5.6K 5% 1/10W	
R44	1-216-027-00	METAL GLAZE 120 5% 1/10W	
R45	1-216-041-00	METAL GLAZE 470 5% 1/10W	
R46	1-216-031-00	METAL GLAZE 180 5% 1/10W	
R47	1-216-075-00	METAL GLAZE I2K 5% 1/10W	
R48	1-216-081-00	METAL GLAZE 22K 5% 1/10W	
R49	1-216-049-00	METAL GLAZE IK 5% 1/10W	
R53	1-216-082-00	METAL GLAZE 24K 5% 1/10W	
R54	1-216-043-00	METAL GLAZE 560 5% 1/10W	
R55	1-216-043-00	METAL GLAZE 560 5% 1/10W	
R56	1-216-065-00	METAL GLAZE 4.7K 5% 1/10W	
R57	1-216-065-00	METAL GLAZE 4.7K 5% 1/10W	
R58	1-216-041-00	METAL GLAZE 470 5% 1/10W	
R59	1-216-043-00	METAL GLAZE 560 5% 1/10W	
R60	1-216-043-00	METAL GLAZE 560 5% 1/10W	
R61	1-216-295-00	METAL GLAZE 0 5% 1/10W	
R63	1-216-043-00	METAL GLAZE 560 5% 1/10W	
R71	1-216-079-00	METAL GLAZE 18K 5% 1/10W	
R72	1-216-079-00	METAL GLAZE 18K 5% 1/10W	
R73	1-216-049-00	METAL GLAZE 1K 5% 1/10W	
R74	1-216-079-00	METAL GLAZE 18K 5% 1/10W	
R75	1-216-079-00	METAL GLAZE 18K 5% 1/10W	
R76	1-216-025-00	METAL GLAZE 100 5% 1/10W	
R77	1-216-174-00	METAL GLAZE 100 5% 1/8W	
R81	1-216-095-00	METAL GLAZE 82K 5% 1/10W	
R82	1-216-121-00	METAL GLAZE 1M 5% 1/10W	
R83	1-216-025-00	METAL GLAZE 100 5% 1/10W	
R84	1-216-085-00	METAL GLAZE 33K 5% 1/10W	
R85	1-216-085-00	METAL GLAZE 33K 5% 1/10W	
R86	1-216-689-00	METAL GLAZE 39K 5% 1/10W	
R87	1-216-095-00	METAL GLAZE 82K 5% 1/10W	
R88	1-216-095-00	METAL GLAZE 82K 5% 1/10W	
R89	1-216-095-00	METAL GLAZE 82K 5% 1/10W	
R90	1-216-075-00	METAL GLAZE 12K 5% 1/10W	
R91	1-216-295-00	METAL GLAZE 0 5% 1/10W	
R92	1-216-075-00	METAL GLAZE 12K 5% 1/10W	
R93	1-216-075-00	METAL GLAZE 12K 5% 1/10W	
R94	1-216-059-00	METAL GLAZE 2.7K 5% 1/10W	
R95	1-216-059-00	METAL GLAZE 2.7K 5% 1/10W	
R96	1-216-059-00	METAL GLAZE 2.7K 5% 1/10W	
R97	1-216-057-00	METAL GLAZE 2.2K 5% 1/10W	
R98	1-216-057-00	METAL GLAZE 2.2K 5% 1/10W	
R99	1-216-057-00	METAL GLAZE 2.2K 5% 1/10W	
R100	1-216-065-00	METAL GLAZE 4.7K 5% 1/10W	
R102	1-216-065-00	METAL GLAZE 4.7K 5% 1/10W	
R103	1-216-063-00	METAL GLAZE 3.9K 5% 1/10W	
R104	1-216-049-00	METAL GLAZE 1K 5% 1/10W	
R105	1-216-033-00	METAL GLAZE 220 5% 1/10W	
R121	1-216-073-00	METAL GLAZE 10K 5% 1/10W	
R122	1-216-065-00	METAL GLAZE 4.7K 5% 1/10W	
R123	1-216-041-00	METAL GLAZE 470 5% 1/10W	
R124	1-216-041-00	METAL GLAZE 470 5% 1/10W	
R125	1-216-041-00	METAL GLAZE 470 5% 1/10W	
R301	1-216-049-00	METAL GLAZE 1K 5% 1/10W	
R302	1-216-049-00	METAL GLAZE 1K 5% 1/10W	
R303	1-216-049-00	METAL GLAZE 1K 5% 1/10W	
R304	1-216-037-00	METAL GLAZE 330 5% 1/10W	

IF (KV-A2941B) IF (KV-A2942U)

REF.NO.	PART NO.	DESCRIPTION	REMARK
R305	1-216-049-00	METAL GLAZE 1K 5% 1/10W	
R306	1-216-025-00	METAL GLAZE 100 5% 1/10W	
R307	1-216-037-00	METAL GLAZE 330 5% 1/10W	
R308	1-216-037-00	METAL GLAZE 330 5% 1/10W	
		< VARIABLE RESISTOR >	
RV2	1-241-120-11	RES, ADJ, CARBON 2.2K	
		< TRANSFORMER >	
T1	1-404-806-21	COIL	
T3	1-416-012-11	COIL	
T4	1-416-012-11	COIL	
T5	1-402-720-11	COIL	
		< CRYSTAL >	
X1	1-579-648-21	VIBRATOR, CERAMIC	
**********			
	1-466-734-11	IF BLOCK (IFH-395) (KV-A2942U) **********	
		< CAPACITOR >	
C101	1-163-239-11	CERAMIC CHIP 33PF 5% 50V	
C102	1-164-222-11	CERAMIC CHIP 0.22MF 25V	
C103	1-164-232-11	CERAMIC CHIP 0.01MF 10% 50V	
C104	1-164-232-11	CERAMIC CHIP 0.01F 10% 50V	
C105	1-164-004-11	CERAMIC CHIP 0.1MF 10% 25V	
C106	1-124-477-11	ELECT 47MF 20% 16V	
C107	1-164-004-11	CERAMIC CHIP 0.1MF 10% 25V	
C108	1-164-004-11	CERAMIC CHIP 0.1MF 10% 25V	
C109	1-164-232-11	CERAMIC CHIP 0.01F 10% 50V	
C112	1-164-004-11	CERAMIC CHIP 0.1MF 10% 25V	
C113	1-164-101-00	CERAMIC CHIP 22PF 5% 50V	
C114	1-124-477-11	ELECT 47MF 20% 16V	
C115	1-164-232-11	CERAMIC CHIP 0.01F 10% 50V	
C116	1-164-346-11	CERAMIC CHIP 1MF 16V	
C118	1-164-004-11	CERAMIC CHIP 0.1MF 10% 25V	
C119	1-163-369-11	CERAMIC CHIP 47PFF 5% 25V	
C122	1-163-093-11	CERAMIC CHIP 10PF 5% 50V	
C130	1-216-295-00	METAL GLAZE 0 5% 1/10W	
C131	1-163-224-11	CERAMIC CHIP 7PF 0.25PF 50V	
C133	1-124-477-11	ELECT 47MF 20% 16V	
C161	1-164-117-00	CERAMIC CHIP 100PF 5% 50V	
C162	1-164-222-11	CERAMIC CHIP 0.22MF 25V	
C163	1-164-346-11	CERAMIC CHIP 1MF 16V	
C164	1-163-141-00	CERAMIC CHIP 0.001MF 5% 50V	
C165	1-164-232-11	CERAMIC CHIP 0.01F 10% 50V	
C166	1-124-477-11	ELECT 47MF 20% 16V	
C167	1-163-213-00	CERAMIC CHIP 0.0022MF 5% 50V	
C168	1-164-346-11	CERAMIC CHIP 1MF 16V	
C170	1-124-477-11	ELECT 47MF 20% 16V	
C171	1-124-477-11	ELECT 47MF 20% 16V	
C173	1-124-477-11	ELECT 47MF 20% 16V	
		< FILTER >	
CD1	1-579-657-21	DISCRIMINATOR, CERAMIC	
CF1	1-567-569-11	FILTER, CERAMIC	
SWF1	1-579-659-11	FILTER, SAWTOOTH WAVE	

REF.NO.	PART NO.	DESCRIPTION	REMARK
		< CONNECTOR >	
CN1	1-750-173-11	PIN, CONNECTOR (PC BOARD) 10P	
CN2	1-750-173-11	PIN, CONNECTOR (PC BOARD) 10P	
		< TRIMMER >	
CT1	1-409-333-00	TRAP, CERAMIC (6.0MHZ)	
		< DIODE >	
D161	8-719-400-18	DIODE MA152WK	
		< IC >	
IC1	8-759-070-76	IC M52308SP	
IC3	8-759-514-54	IC BA7046	
		< COIL >	
L101	1-408-414-00	INDUCTOR 27UH	
L102	1-408-419-00	INDUCTOR 68UH	
L103	1-408-419-00	INDUCTOR 68UH	
L104	1-408-406-00	INDUCTOR 5.6UH	
L105	1-408-410-00	INDUCTOR 12UH	
L142	1-408-790-41	INDUCTOR 0.56UH	
L161	1-408-419-00	INDUCTOR 68UH	
		< TRANSISTOR >	
Q101	8-729-920-74	TRANSISTOR 2SC2412K-QR	
Q102	8-729-216-22	TRANSISTOR 2SA1162-G	
Q122	8-729-216-22	TRANSISTOR 2SA1162-G	
Q161	8-729-216-22	TRANSISTOR 2SA1162-G	
Q172	8-729-920-74	TRANSISTOR 2SC2412K-QR	
Q173	8-729-920-74	TRANSISTOR 2SC2412K-QR	
		< RESISTOR >	
JR1	1-216-296-00	METAL GLAZE 0 5% 1/[illegible]W	
JR2	1-216-295-00	METAL GLAZE 0 5% 1/[illegible]OW	
JR3	1-216-296-00	METAL GLAZE 0 5% 1/[illegible]W	
JR4	1-216-295-00	METAL GLAZE 0 5% 1/[illegible]OW	
JR7	1-216-295-00	METAL GLAZE 0 5% 1/[illegible]OW	
JR8	1-216-295-00	METAL GLAZE 0 5% 1/[illegible]OW	
JR9	1-216-296-00	METAL GLAZE 0 5% 1/[illegible]W	
JR10	1-216-296-00	METAL GLAZE 0 5% 1/[illegible]W	
JR11	1-216-296-00	METAL GLAZE 0 5% 1/[illegible]W	
JR12	1-216-296-00	METAL GLAZE 0 5% 1/[illegible]W	
JR13	1-163-093-00	CERAMIC CHIP 10PF 5% 50V	
JR14	1-216-296-00	METAL GLAZE 0 5% 1/[illegible]W	
JR16	1-216-295-00	METAL GLAZE 0 5% 1/[illegible]OW	
JR18	1-216-295-00	METAL GLAZE 0 5% 1/[illegible]OW	
JR19	1-216-296-00	METAL GLAZE 0 5% 1/[illegible]W	
JR20	1-216-296-00	METAL GLAZE 0 5% 1/[illegible]W	
JR21	1-216-296-00	METAL GLAZE 0 5% 1/[illegible]W	
JR23	1-216-296-00	METAL GLAZE 0 5% 1/[illegible]W	
JR24	1-216-296-00	METAL GLAZE 0 5% 1/[illegible]W	
JR25	1-216-296-00	METAL GLAZE 0 5% 1/[illegible]W	
JR29	1-216-296-00	METAL GLAZE 0 5% 1/[illegible]W	
JR30	1-216-295-00	METAL GLAZE 0 5% 1/[illegible]OW	
JR33	1-216-295-00	METAL GLAZE 0 5% 1/[illegible]OW	
JR38	1-216-296-00	METAL GLAZE 0 5% 1/[illegible]W	
JR39	1-216-296-00	METAL GLAZE 0 5% 1/[illegible]W	

IF (KV-A2942U) M2

REF.NO.	PART NO.	DESCRIPTION				REMARK
JR40	1-216-296-00	METAL GLAZE	0	5%	1/8W	
JR41	1-216-295-00	METAL GLAZE	0	5%	1/10W	
JR42	1-216-295-00	METAL GLAZE	0	5%	1/10W	
JR101	1-216-295-00	METAL GLAZE	0	5%	1/10W	
R101	1-216-075-00	METAL GLAZE	12K	5%	1/10W	
R102	1-216-045-00	METAL GLAZE	680	5%	1/10W	
R103	1-216-057-00	METAL GLAZE	2.2K	5%	1/10W	
R104	1-216-051-00	METAL GLAZE	1.2K	5%	1/10W	
R105	1-216-043-00	METAL GLAZE	560	5%	1/10W	
R106	1-216-049-00	METAL GLAZE	1K	5%	1/10W	
R107	1-216-065-00	METAL GLAZE	4.7K	5%	1/10W	
R108	1-216-065-00	METAL GLAZE	4.7K	5%	1/10W	
R110	1-216-041-00	METAL GLAZE	470	5%	1/10W	
R112	1-216-045-00	METAL GLAZE	680	5%	1/10W	
R113	1-216-031-00	METAL GLAZE	180	5%	1/10W	
R114	1-216-049-00	METAL GLAZE	1K	5%	1/10W	
R115	1-216-031-00	METAL GLAZE	180	5%	1/10W	
R116	1-216-101-00	METAL GLAZE	150K	5%	1/10W	
R117	1-216-097-00	METAL GLAZE	100K	5%	1/10W	
R118	1-216-117-00	METAL GLAZE	680K	5%	1/10W	
R119	1-216-240-00	METAL GLAZE	56K	5%	1/8W	
R120	1-216-075-00	METAL GLAZE	12K	5%	1/10W	
R121	1-216-053-00	METAL GLAZE	1.5K	5%	1/10W	
R122	1-216-061-00	METAL GLAZE	3.3K	5%	1/10W	
R123	1-216-061-00	METAL GLAZE	3.3K	5%	1/10W	
R130	1-216-049-00	METAL GLAZE	1K	5%	1/10W	
R131	1-216-025-00	METAL GLAZE	100	5%	1/10W	
R132	1-216-069-00	METAL GLAZE	6.8K	5%	1/10W	
R133	1-216-061-00	METAL GLAZE	3.3K	5%	1/10W	
R134	1-216-049-00	METAL GLAZE	1K	5%	1/10W	
R135	1-216-198-00	METAL GLAZE	1K	5%	1/8W	
R153	1-216-025-00	METAL GLAZE	100	5%	1/10W	
R159	1-216-107-00	METAL GLAZE	270K	5%	1/10W	
R160	1-216-049-00	METAL GLAZE	1K	5%	1/10W	
R161	1-216-755-11	METAL CHIP	130K	0.50%	1/10W	
R162	1-216-073-00	METAL GLAZE	10K	5%	1/10W	
R163	1-216-113-00	METAL GLAZE	470K	5%	1/10W	
R164	1-216-113-00	METAL GLAZE	470K	5%	1/10W	
R165	1-216-081-00	METAL GLAZE	22K	5%	1/10W	
R166	1-216-049-00	METAL GLAZE	1K	5%	1/10W	
R167	1-216-073-00	METAL GLAZE	10K	5%	1/10W	
R168	1-216-113-00	METAL GLAZE	470K	5%	1/10W	
R169	1-216-049-00	METAL GLAZE	1K	5%	1/10W	
R175	1-216-083-00	METAL GLAZE	27K	5%	1/10W	
R176	1-216-075-00	METAL GLAZE	12K	5%	1/10W	
R177	1-216-095-00	METAL GLAZE	82K	5%	1/10W	
R178	1-216-059-00	METAL GLAZE	2.7K	5%	1/10W	
R179	1-216-057-00	METAL GLAZE	2.2K	5%	1/10W	
R181	1-216-037-00	METAL GLAZE	330	5%	1/10W	
		< VARIABLE RESISTOR >				
RV1	1-241-121-11	RES, ADJ, CARBON 4.7K				
		< TRANSFORMER >				
T4	1-416-017-21	COIL				
T5	1-416-018-21	COIL				

REF.NO.	PART NO.	DESCRIPTION			REMARK
	*A-1635-023-A	M2 BOARD, COMPLETE			
		**********			
		< CAPACITOR >			
C001	1-163-117-00	CERAMIC CHIP 100PF	5%	50V	
C004	1-164-222-11	CERAMIC CHIP 0.22MF		25V	
C007	1-163-117-00	CERAMIC CHIP 100PF	5%	50V	
C008	1-163-117-00	CERAMIC CHIP 100PF	5%	50V	
C010	1-163-117-00	CERAMIC CHIP 100PF	5%	50V	
C011	1-163-117-00	CERAMIC CHIP 100PF	5%	50V	
C012	1-163-117-00	CERAMIC CHIP 100PF	5%	50V	
C014	1-163-117-00	CERAMIC CHIP 100PF	5%	50V	
C016	1-163-141-00	CERAMIC CHIP 0.001MF	5%	50V	
C017	1-164-222-11	CERAMIC CHIP 0.22MF		25V	
C018	1-164-505-11	CERAMIC CHIP 2.2MF		16V	
C019	1-124-916-11	ELECT 22MF	20%	50V	
C020	1-163-117-00	CERAMIC CHIP 100PF	5%	50V	
C022	1-164-004-11	CERAMIC CHIP 0.1MF	10%	25V	
C023	1-164-004-11	CERAMIC CHIP 0.1MF	10%	25V	
C024	1-164-004-11	CERAMIC CHIP 0.1MF	10%	25V	
C025	1-164-222-11	CERAMIC CHIP 0.22MF		25V	
C026	1-164-222-11	CERAMIC CHIP 0.22MF		25V	
C032	1-163-117-00	CERAMIC CHIP 100PF	5%	50V	
C035	1-163-033-00	CERAMIC CHIP 0.022MF		50V	
C036	1-164-005-11	CERAMIC CHIP 0.47MF		25V	
C037	1-163-117-00	CERAMIC CHIP 100PF	5%	50V	
C039	1-163-011-11	CERAMIC CHIP 0.0015MF	10%	50V	
C042	1-162-638-11	CERAMIC CHIP 1MF		16V	
C044	1-163-117-00	CERAMIC CHIP 100PF	5%	50V	
C522	1-163-141-00	CERAMIC CHIP 0.001MF	5%	50V	
C523	1-163-141-00	CERAMIC CHIP 0.001MF	5%	50V	
C524	1-163-113-00	CERAMIC CHIP 68PF	5%	50V	
C525	1-164-222-11	CERAMIC CHIP 0.22MF		25V	
C528	1-163-105-00	CERAMIC CHIP 33PF	5%	50V	
C529	1-163-169-00	CERAMIC CHIP 33PF	5%	50V	
C541	1-164-232-11	CERAMIC CHIP 0.01MF	10%	50V	
C542	1-163-037-11	CERAMIC CHIP 0.022MF	10%	25V	
C543	1-164-161-11	CERAMIC CHIP 0.0022MF	10%	50V	
C544	1-164-161-11	CERAMIC CHIP 0.0022MF	10%	50V	
C546	1-164-004-11	CERAMIC CHIP 0.1MF	10%	25V	
C547	1-163-020-00	CERAMIC CHIP 0.0082MF	10%	50V	
C549	1-163-989-11	CERAMIC CHIP 0.033MF	10%	25V	
C550	1-163-141-00	CERAMIC CHIP 0.001MF	5%	50V	
C559	1-164-004-11	CERAMIC CHIP 0.1MF	10%	25V	
C560	1-164-161-11	CERAMIC CHIP 0.0022MF	10%	50V	
C563	1-163-031-11	CERAMIC CHIP 0.01MF		50V	
C564	1-163-031-11	CERAMIC CHIP 0.01MF		50V	
C565	1-163-031-11	CERAMIC CHIP 0.01MF		50V	
C566	1-163-031-11	CERAMIC CHIP 0.01MF		50V	
C567	1-163-009-11	CERAMIC CHIP 0.001MF	10%	50V	
C568	1-163-009-11	CERAMIC CHIP 0.001MF	10%	50V	
C569	1-164-161-11	CERAMIC CHIP 0.0022MF	10%	50V	
C570	1-162-568-11	CERAMIC CHIP 0.33MF	10%	16V	
C2001	1-163-235-11	CERAMIC CHIP 22PF	5%	50V	
C2002	1-163-235-11	CERAMIC CHIP 22PF	5%	50V	
C2004	1-164-222-11	CERAMIC CHIP 0.22MF		25V	
C2005	1-163-038-00	CERAMIC CHIP 0.1MF		25V	
C2008	1-164-222-11	CERAMIC CHIP 0.22MF		25V	
C2016	1-164-222-11	CERAMIC CHIP 0.22MF		25V	
C2017	1-164-222-11	CERAMIC CHIP 0.22MF		25V	

REF.NO.	PART NO.	DESCRIPTION		REMARK
C2018	1-164-505-11	CERAMIC CHIP 2.2MF		16V
C2019	1-124-916-11	ELECT 22MF	20%	50V
C2020	1-164-222-11	CERAMIC CHIP 0.22MF		25V
C2021	1-163-113-00	CERAMIC CHIP 68PF	5%	50V
C2024	1-163-117-00	CERAMIC CHIP 100PF	5%	50V
C2025	1-163-117-00	CERAMIC CHIP 100PF	5%	50V
C2027	1-164-222-11	CERAMIC CHIP 0.22MF		25V
		< FILTER >		
CD001	1-579-126-11	VIBRATOR, CERAMIC		
		< CONNECTOR >		
CN1413	1-695-301-11	CONNECTOR, BOARD TO BOARD 40P		
CN1426	*1-568-881-51	PIN, CONNECTOR 6P		
CN1432	*1-568-882-51	PIN, CONNECTOR 7P		
		< DIODE >		
D001	8-719-027-82	DIODE MA3039H-TX		
D2001	8-719-036-58	DIODE MA3030-H(TX)		
D2003	8-719-914-44	DIODE DAP202K		
D2007	8-719-914-44	DIODE DAP202K		
		< IC >		
IC001	8-759-168-52	IC SDA30C162-GEG		
IC561	8-752-347-92	IC CXD2018Q		
IC562	8-759-998-98	IC LM358D		
IC563	8-759-708-05	IC NJM78L05A		
IC2002	8-759-262-58	IC SDA5273P-C22-GEG		
		< COIL >		
L001	1-408-421-00	INDUCTOR 100UH		
L561	1-408-409-00	INDUCTOR 10UH		
L562	1-408-409-00	INDUCTOR 10UH		
L563	1-408-947-00	INDUCTOR 2.2MMH		
L2001	1-410-674-31	INDUCTOR 82UH		
		< TRANSISTOR >		
Q002	8-729-216-22	TRANSISTOR 2SA1162-G		
Q003	8-729-920-74	TRANSISTOR 2SC2412K-QR		
Q564	8-729-216-22	TRANSISTOR 2SA1162-G		
Q565	8-729-920-74	TRANSISTOR 2SC2412K-QR		
Q566	8-729-920-74	TRANSISTOR 2SC2412K-QR		
Q567	8-729-901-01	TRANSISTOR DTC144EK		
Q2001	8-729-920-74	TRANSISTOR 2SC2412K-QR		
Q2002	8-729-920-74	TRANSISTOR 2SC2412K-QR		
Q2003	8-729-216-22	TRANSISTOR 2SA1162-G		
Q2004	8-729-920-74	TRANSISTOR 2SC2412K-QR		
Q2005	8-729-920-74	TRANSISTOR 2SC2412K-QR		
Q2006	8-729-901-01	TRANSISTOR DTC144EK		
Q2008	8-729-901-00	TRANSISTOR DTC124EK		
		< RESISTOR >		
JR553	1-216-295-91	METAL GLAZE 0	5%	1/10W
R001	1-216-025-00	METAL GLAZE 100	5%	1/10W
R002	1-216-025-00	METAL GLAZE 100	5%	1/10W
R003	1-216-049-00	METAL GLAZE 1K	5%	1/10W
R004	1-216-049-00	METAL GLAZE 1K	5%	1/10W
R005	1-216-295-91	METAL GLAZE 0	5%	1/10W
R007	1-216-073-00	METAL GLAZE 10K	5%	1/10W
R008	1-216-049-00	METAL GLAZE 1K	5%	1/10W

REF.NO.	PART NO.	DESCRIPTION			REMARK
R010	1-216-049-00	METAL GLAZE	1K	5%	1/10W
R011	1-216-049-00	METAL GLAZE	1K	5%	1/10W
R012	1-216-049-00	METAL GLAZE	1K	5%	1/10W
R014	1-216-049-00	METAL GLAZE	1K	5%	1/10W
R016	1-216-045-00	METAL GLAZE	680	5%	1/10W
R017	1-216-049-00	METAL GLAZE	1K	5%	1/10W
R018	1-216-041-00	METAL GLAZE	470	5%	1/10W
R020	1-216-049-00	METAL GLAZE	1K	5%	1/10W
R021	1-216-065-00	METAL GLAZE	4.7K	5%	1/10W
R023	1-216-025-00	METAL GLAZE	100	5%	1/10W
R024	1-216-049-00	METAL GLAZE	1K	5%	1/10W
R025	1-216-049-00	METAL GLAZE	1K	5%	1/10W
R026	1-216-049-00	METAL GLAZE	1K	5%	1/10W
R027	1-216-049-00	METAL GLAZE	1K	5%	1/10W
R028	1-216-677-11	METAL CHIP	12K	0.50%	1/10W
R030	1-216-049-00	METAL GLAZE	1K	5%	1/10W
R032	1-216-049-00	METAL GLAZE	1K	5%	1/10W
R033	1-216-049-00	METAL GLAZE	1K	5%	1/10W
R034	1-216-057-00	METAL GLAZE	2.2K	5%	1/10W
R035	1-216-057-00	METAL GLAZE	2.2K	5%	1/10W
R038	1-216-073-00	METAL GLAZE	10K	5%	1/10W
R049	1-216-049-00	METAL GLAZE	1K	5%	1/10W
R050	1-216-073-00	METAL GLAZE	10K	5%	1/10W
R051	1-216-081-00	METAL GLAZE	22K	5%	1/10W
R052	1-216-073-00	METAL GLAZE	10K	5%	1/10W
R053	1-216-065-00	METAL GLAZE	4.7K	5%	1/10W
R054	1-216-081-00	METAL GLAZE	22K	5%	1/10W
R055	1-216-081-00	METAL GLAZE	22K	5%	1/10W
R067	1-216-043-00	METAL GLAZE	560	5%	1/10W
R068	1-216-043-00	METAL GLAZE	560	5%	1/10W
R069	1-216-037-00	METAL GLAZE	330	5%	1/10W
R071	1-216-198-91	METAL GLAZE	1K	5%	1/8W
R535	1-216-057-00	METAL GLAZE	2.2K	5%	1/10W
R536	1-216-057-00	METAL GLAZE	2.2K	5%	1/10W
R538	1-216-025-00	METAL GLAZE	100	5%	1/10W
R539	1-216-657-11	METAL CHIP	1.8K	0.50%	1/10W
R541	1-216-049-00	METAL GLAZE	1K	5%	1/10W
R542	1-216-025-00	METAL GLAZE	100	5%	1/10W
R544	1-216-085-00	METAL GLAZE	33K	5%	1/10W
R545	1-216-033-00	METAL GLAZE	220	5%	1/10W
R546	1-216-061-00	METAL GLAZE	3.3K	5%	1/10W
R547	1-216-651-11	METAL CHIP	1K	0.50%	1/10W
R551	1-216-049-00	METAL GLAZE	1K	5%	1/10W
R552	1-216-097-00	METAL GLAZE	100K	5%	1/10W
R553	1-216-085-00	METAL GLAZE	33K	5%	1/10W
R559	1-216-049-00	METAL GLAZE	1K	5%	1/10W
R560	1-216-073-00	METAL GLAZE	10K	5%	1/10W
R564	1-216-091-00	METAL GLAZE	56K	5%	1/10W
R565	1-216-065-00	METAL GLAZE	4.7K	5%	1/10W
R566	1-216-073-00	METAL GLAZE	10K	5%	1/10W
R567	1-216-085-00	METAL GLAZE	33K	5%	1/10W
R568	1-216-109-00	METAL GLAZE	330K	5%	1/10W
R570	1-216-049-00	METAL GLAZE	1K	5%	1/10W
R2001	1-216-065-00	METAL GLAZE	4.7K	5%	1/10W
R2002	1-216-043-00	METAL GLAZE	560	5%	1/10W
R2003	1-216-065-00	METAL GLAZE	4.7K	5%	1/10W
R2004	1-216-037-00	METAL GLAZE	330	5%	1/10W
R2005	1-216-041-00	METAL GLAZE	470	5%	1/10W
R2007	1-216-073-00	METAL GLAZE	10K	5%	1/10W
R2008	1-216-025-00	METAL GLAZE	100	5%	1/10W

The components identified by shading and marked ⚠ are critical for safety.
Replace only with the part number specified.

M2 C

REF.NO.	PART NO.	DESCRIPTION				REMARK
R2009	1-216-057-00	METAL GLAZE	2.2K	5%	1/10W	
R2010	1-216-025-00	METAL GLAZE	100	5%	1/10W	
R2011	1-216-057-00	METAL GLAZE	2.2K	5%	1/10W	
R2012	1-216-631-11	METAL CHIP	150	0.50%	1/10W	
R2013	1-216-631-11	METAL CHIP	150	0.50%	1/10W	
R2014	1-216-631-11	METAL CHIP	150	0.50%	1/10W	
R2017	1-216-081-00	METAL GLAZE	22K	5%	1/10W	
R2018	1-216-081-00	METAL GLAZE	22K	5%	1/10W	
R2019	1-216-081-00	METAL GLAZE	22K	5%	1/10W	
R2020	1-216-057-00	METAL GLAZE	2.2K	5%	1/10W	
R2021	1-216-057-00	METAL GLAZE	2.2K	5%	1/10W	
R2025	1-216-063-00	METAL GLAZE	3.9K	5%	1/10W	
R2026	1-216-065-00	METAL GLAZE	4.7K	5%	1/10W	
R2030	1-216-295-91	METAL GLAZE	0	5%	1/10W	
R2032	1-216-049-00	METAL GLAZE	1K	5%	1/10W	
R2033	1-216-295-91	METAL GLAZE	0	5%	1/10W	
R2036	1-216-049-00	METAL GLAZE	1K	5%	1/10W	
R2037	1-216-049-00	METAL GLAZE	1K	5%	1/10W	
R2039	1-216-041-00	METAL GLAZE	470	5%	1/10W	
R2040	1-216-055-00	METAL GLAZE	1.8K	5%	1/10W	
R2041	1-249-409-11	CARBON	220	5%	1/4W	
		< CRYSTAL >				
X2001	1-579-965-21	VIBRATOR, CRYSTAL				
**********						
	*A-1638-042-A	C BOARD, COMPLETE				
		**********				
		< CAPACITOR >				
C701	1-162-114-00	CERAMIC	0.0047MF		2KV	
C703	1-123-946-00	ELECT	4.7MF	20%	250V	
C705	1-162-116-00	CERAMIC	680PF	10%	2KV	
C708	1-163-197-00	CERAMIC CHIP	470PF	10%	50V	
C709	1-163-005-11	CERAMIC CHIP	470PF	10%	50V	
C710	1-163-005-11	CERAMIC CHIP	470PF	10%	50V	
C711	1-101-880-00	CERAMIC	47PF	5%	50V	
C712	1-163-121-00	CERAMIC CHIP	150PF	5%	50V	
C713	1-163-121-00	CERAMIC CHIP	150PF	5%	50V	
C714	1-163-121-00	CERAMIC CHIP	150PF	5%	50V	
C716	1-124-478-11	ELECT	100MF	20%	25V	
		< CONNECTOR >				
CN0002	1-508-786-00	PIN, CONNECTOR (5MM PITCH) 2P				
CN0403	1-564-511-11	PLUG, CONNECTOR 8P				
CN0421	1-508-768-00	PIN, CONNECTOR (5MM PITCH) 6P				
		< DIODE >				
D701	8-719-901-33	DIODE 1SS133				
D702	8-719-901-33	DIODE 1SS133				
D703	8-719-901-33	DIODE 1SS133				
D704	8-719-901-33	DIODE 1SS133				
D705	8-719-901-33	DIODE 1SS133				
D706	8-719-901-33	DIODE 1SS133				
D707	8-719-901-33	DIODE 1SS133				
D708	8-719-901-33	DIODE 1SS133				
D709	8-719-901-33	DIODE 1SS133				
D710	8-719-901-33	DIODE 1SS133				
D713	8-719-908-03	DIODE GP08D				

REF.NO.	PART NO.	DESCRIPTION				REMARK
		< CRT SOCKET >				
J701	⚠ 1-526-990-21	SOCKET, CRT				
		< COIL >				
L701	1-410-667-31	INDUCTOR	22UH			
L703	1-408-609-41	INDUCTOR	33UH			
L705	1-408-609-41	INDUCTOR	33UH			
L707	1-408-609-41	INDUCTOR	33UH			
		< TRANSISTOR >				
Q701	8-729-906-70	TRANSISTOR BF871				
Q702	8-729-906-70	TRANSISTOR BF871				
Q703	8-729-906-70	TRANSISTOR BF871				
Q704	8-729-906-70	TRANSISTOR BF871				
Q705	8-729-906-70	TRANSISTOR BF871				
Q706	8-729-906-70	TRANSISTOR BF871				
Q707	8-729-200-17	TRANSISTOR 2SA1091-O				
Q708	8-729-200-17	TRANSISTOR 2SA1091-O				
Q709	8-729-200-17	TRANSISTOR 2SA1091-O				
Q710	8-729-920-74	TRANSISTOR 2SC2412K-QR				
Q711	8-729-920-74	TRANSISTOR 2SC2412K-QR				
Q712	8-729-920-74	TRANSISTOR 2SC2412K-QR				
Q713	8-729-216-22	TRANSISTOR 2SA1162-G				
Q714	8-729-255-12	TRANSISTOR 2SC2551-O				
		< RESISTOR >				
JR701	1-216-296-91	METAL GLAZE	0	5%	1/8W	
JR703	1-216-296-91	METAL GLAZE	0	5%	1/8W	
R701	1-202-848-00	SOLID	680K	10%	1/2W	
R702	1-202-838-00	SOLID	100K	20%	1/2W	
R703	1-202-838-00	SOLID	100K	20%	1/2W	
R704	1-202-842-11	SOLID	220K	10%	1/2W	
R705	1-216-398-11	METAL OXIDE	5.6	5%	3W	F
R706	1-216-398-11	METAL OXIDE	5.6	5%	3W	F
R707	1-249-421-11	CARBON	2.2K	5%	1/4W	
R708	1-249-421-11	CARBON	2.2K	5%	1/4W	
R709	1-249-421-11	CARBON	2.2K	5%	1/4W	
R710	1-215-899-11	METAL OXIDE	15K	5%	2W	F
R711	1-202-820-11	SOLID	1.5K	20%	1/2W	
R712	1-215-899-11	METAL OXIDE	15K	5%	2W	F
R713	1-202-820-11	SOLID	1.5K	20%	1/2W	
R714	1-215-899-11	METAL OXIDE	15K	5%	2W	F
R715	1-202-820-11	SOLID	1.5K	20%	1/2W	
R716	1-247-700-11	CARBON	100	5%	1/4W	F
R717	1-249-405-11	CARBON	100	5%	1/4W	F
R718	1-247-700-11	CARBON	100	5%	1/4W	F
R720	1-249-417-11	CARBON	1K	5%	1/4W	F
R722	1-247-713-11	CARBON	1K	5%	1/4W	F
R724	1-249-417-11	CARBON	1K	5%	1/4W	F
R725	1-216-067-00	METAL GLAZE	5.6K	5%	1/10W	
R726	1-216-067-00	METAL GLAZE	5.6K	5%	1/10W	
R727	1-216-067-00	METAL GLAZE	5.6K	5%	1/10W	
R728	1-216-037-00	METAL GLAZE	330	5%	1/10W	
R729	1-216-037-00	METAL GLAZE	330	5%	1/10W	
R730	1-216-037-00	METAL GLAZE	330	5%	1/10W	
R731	1-216-017-00	METAL GLAZE	47	5%	1/10W	
R732	1-216-017-00	METAL GLAZE	47	5%	1/10W	
R733	1-216-017-00	METAL GLAZE	47	5%	1/10W	
R734	1-202-549-00	SOLID	100	20%	1/2W	

C D4 D5

REF.NO.	PART NO.	DESCRIPTION				REMARK
R735	1-216-049-00	METAL GLAZE	1K	5%	1/10W	
R738	1-216-025-00	METAL GLAZE	100	5%	1/10W	
R739	1-216-025-00	METAL GLAZE	100	5%	1/10W	
R740	1-216-025-00	METAL GLAZE	100	5%	1/10W	
R741	1-216-089-91	METAL GLAZE	47K	5%	1/10W	
R742	1-216-029-00	METAL GLAZE	150	5%	1/10W	
R743	1-249-434-11	CARBON	27K	5%	1/4W	
R747	1-216-489-11	METAL OXIDE	27K	5%	3W	F
R749	1-216-490-11	METAL OXIDE	39K	5%	3W	F
R751	1-215-926-00	METAL OXIDE	33K	5%	3W	F
R753	1-216-073-00	METAL GLAZE	10K	5%	1/10W	
R758	1-249-419-11	CARBON	1.5K	5%	1/4W	
R759	1-249-419-11	CARBON	1.5K	5%	1/4W	
R760	1-249-419-11	CARBON	1.5K	5%	1/4W	
		< VARIABLE RESISTOR >				
RV701	1-230-641-11	RES, ADJ, METAL GLAZE 2.2M				
RV702	1-241-656-11	RES, ADJ, METAL FILM 110M				
**********						
	*A-1642-102-A	D4 BOARD, COMPLETE				
		**********				
		< CAPACITOR >				
C1841	1-137-371-11	FILM	0.015MF	5%	50V	
C1844	1-106-383-00	MYLAR	0.047MF	5%	200V	
C1845	1-130-785-11	MYLAR	0.47MF	10%	100V	
C1851	1-126-103-11	ELECT	470MF	20%	16V	
C1854	1-124-477-11	ELECT	47MF	20%	16V	
C1855	1-164-232-11	CERAMIC CHIP	0.01MF	10%	50V	
C1858	1-163-275-11	CERAMIC CHIP	0.001MF	5%	50V	
C1859	1-163-275-11	CERAMIC CHIP	0.001MF	5%	50V	
C1860	1-163-989-11	CERAMIC CHIP	0.033MF	10%	25V	
C1861	1-163-989-11	CERAMIC CHIP	0.033MF	10%	25V	
C1862	1-124-006-11	ELECT	10MF	20%	25V	
C1863	1-136-104-00	FILM	0.16MF	5%	200V	
C1867	1-126-103-11	ELECT	470MF	20%	16V	
C1892	1-163-989-11	CERAMIC CHIP	0.033MF	10%	25V	
		< CONNECTOR >				
CN1823	*1-573-299-11	CONNECTOR, BOARD TO BOARD 10P				
CN1841	*1-568-878-51	PIN, CONNECTOR 3P				
CN1842	1-508-784-00	PIN, CONNECTOR (5MM PITCH) 1P				
		< DIODE >				
D1840	8-719-302-43	DIODE EL1Z				
D1841	8-719-914-43	DIODE DAN202K				
D1856	8-719-914-43	DIODE DAN202K				
D1867	8-719-987-87	DIODE ERA85-009				
D1868	8-719-987-87	DIODE ERA85-009				
D1882	8-719-109-89	DIODE RD5.6ESB2				
D1883	8-719-109-89	DIODE RD5.6ESB2				
		< IC >				
IC1851	8-759-708-05	IC NJM78L05A				
IC1852	8-759-135-80	IC UPC358C				
IC1853	8-759-902-21	IC SN74LS221N				
		< COIL >				
L1841	1-459-075-00	COIL,DYNAMIC CONVERSION CHOKE				
L1843	1-459-104-00	COIL, WITH CORE				
L1852	1-459-390-00	COIL (WITH CORE)				
		< TRANSISTOR >				
Q1840	8-729-920-74	TRANSISTOR 2SC2412K-QR				
Q1841	8-729-195-82	TRANSISTOR 2SC2958-L				
Q1851	8-729-920-74	TRANSISTOR 2SC2412K-QR				
Q1854	8-729-216-22	TRANSISTOR 2SA1162-G				
Q1855	8-729-920-74	TRANSISTOR 2SC2412K-QR				
Q1856	8-729-017-05	TRANSISTOR 2SA1837				
Q1857	8-729-122-03	TRANSISTOR 2SA1220A-P				
Q1858	8-729-920-92	TRANSISTOR 2SD2096-EF				
Q1859	8-729-216-22	TRANSISTOR 2SA1162-G				
Q1860	8-729-920-74	TRANSISTOR 2SC2412K-QR				
Q1861	8-729-017-06	TRANSISTOR 2SC4793				
		< RESISTOR >				
JR1851	1-216-295-91	METAL GLAZE	0	5%	1/10W	
R1841	1-216-085-00	METAL GLAZE	33K	5%	1/10W	
R1842	1-260-111-11	CARBON	10K	5%	1/2W	
R1843	1-216-057-00	METAL GLAZE	2.2K	5%	1/10W	
R1844	1-216-057-00	METAL GLAZE	2.2K	5%	1/10W	
R1847	1-249-399-11	CARBON	33	5%	1/4W	F
R1848	1-216-434-11	METAL OXIDE	1.8K	5%	1W	F
R1849	1-260-111-11	CARBON	10K	5%	1/2W	
R1852	1-216-089-91	METAL GLAZE	47K	5%	1/10W	
R1853	1-216-691-11	METAL CHIP	47K	0.50%	1/10W	
R1854	1-216-073-00	METAL GLAZE	10K	5%	1/10W	
R1860	1-216-021-00	METAL GLAZE	68	5%	1/10W	
R1861	1-216-073-00	METAL GLAZE	10K	5%	1/10W	
R1862	1-216-055-00	METAL GLAZE	1.8K	5%	1/10W	
R1863	1-218-758-11	METAL CHIP	180K	0.50%	1/10W	
R1873	1-216-474-11	METAL OXIDE	82	5%	3W	F
R1875	1-216-683-11	METAL CHIP	22K	0.50%	1/10W	
R1877	1-216-097-00	METAL GLAZE	100K	5%	1/10W	
R1878	1-260-091-11	CARBON	220	5%	1/2W	
R1881	1-260-091-11	CARBON	220	5%	1/2W	
R1882	1-215-869-11	METAL OXIDE	1K	5%	1W	F
R1893	1-216-474-11	METAL OXIDE	82	5%	3W	F
R1894	1-216-073-00	METAL GLAZE	10K	5%	1/10W	
R1895	1-216-097-00	METAL GLAZE	100K	5%	1/10W	
R1898	1-216-037-00	METAL GLAZE	330	5%	1/10W	
R1899	1-216-037-00	METAL GLAZE	330	5%	1/10W	
		< VARIABLE RESISTOR >				
RV1851	1-241-765-11	RES, ADJ, CERMET 22K				
RV1853	1-241-628-11	RES, ADJ, CARBON 2.2K				
		< TRANSFORMER >				
T1851	1-423-786-11	TRANSFORMER, FERRITE (VPOT)				
**********						
	*A-1640-109-A	D5 BOARD, COMPLETE				
		**********				
		< CAPACITOR >				
C803	1-164-695-11	CERAMIC CHIP	0.0022MF	5%	50V	
C804	1-136-161-00	FILM	0.047MF	5%	50V	
C806	1-124-907-11	ELECT	10MF	20%	50V	

D5 D

REF.NO.	PART NO.	DESCRIPTION			REMARK
C807	1-102-002-00	CERAMIC	680PF	10%	500V
C823	1-124-902-00	ELECT	0.47MF	20%	50V
C827	1-130-777-00	FILM	0.1MF	5%	63V
C847	1-164-337-11	CERAMIC CHIP	2.2MF		16V
C852	1-164-299-11	CERAMIC CHIP	0.22MF	10%	25V
C853	1-124-477-11	ELECT	47MF	20%	25V
C857	1-124-902-00	ELECT	0.47MF	20%	50V
C861	1-130-777-00	FILM	0.1MF	5%	63V
C866	1-137-364-11	FILM	0.001MF	5%	50V
C870	1-137-364-11	FILM	0.001MF	5%	50V
C871	1-130-651-00	FILM	0.001MF	2%	100V
C872	1-124-907-11	ELECT	10MF	20%	50V
C873	1-137-364-11	FILM	0.001MF	5%	50V
		< CONNECTOR >			
CN2044	*1-573-299-11	CONNECTOR, BOARD TO BOARD 10P			
		< DIODE >			
D804	8-719-901-33	DIODE 1SS133			
D808	8-719-109-88	DIODE RD5.6ESB1			
D818	8-719-109-93	DIODE RD6.2ESB2			
D821	8-719-914-44	DIODE DAP202K			
D827	8-719-982-96	DIODE MTZJ-T-77-2.2A			
D830	8-719-914-44	DIODE DAP202K			
D831	8-719-914-43	DIODE DAN202K			
D832	8-719-914-44	DIODE DAP202K			
D833	8-719-914-44	DIODE DAP202K			
		< IC >			
IC802	8-759-103-93	IC UPC393C			
		< TRANSISTOR >			
Q804	8-729-216-22	TRANSISTOR 2SA1162-G			
Q805	8-729-216-22	TRANSISTOR 2SA1162-G			
Q812	8-729-920-74	TRANSISTOR 2SC2412K-QR			
Q818	8-729-216-22	TRANSISTOR 2SA1162-G			
		< RESISTOR >			
JR802	1-216-295-91	METAL GLAZE	0	5%	1/10W
JR803	1-216-295-91	METAL GLAZE	0	5%	1/10W
JR804	1-216-295-91	METAL GLAZE	0	5%	1/10W
R802	1-216-295-91	METAL GLAZE	0	5%	1/10W
R805	1-216-679-11	METAL CHIP	15K	0.50%	1/10W
R806	1-216-061-00	METAL GLAZE	3.3K	5%	1/10W
R808	1-216-085-00	METAL GLAZE	33K	5%	1/10W
R809	1-216-097-00	METAL GLAZE	100K	5%	1/10W
R813	1-216-065-00	METAL GLAZE	4.7K	5%	1/10W
R814	1-216-091-00	METAL GLAZE	56K	5%	1/10W
R815	1-216-081-00	METAL GLAZE	22K	5%	1/10W
R820	1-216-097-00	METAL GLAZE	100K	5%	1/10W
R824	1-216-675-11	METAL CHIP	10K	0.50%	1/10W
R828	1-216-121-00	METAL GLAZE	1M	5%	1/10W
R829	1-249-429-11	CARBON	10K	5%	1/4W F
R830	1-216-687-11	METAL CHIP	33K	0.50%	1/10W
R832	1-216-081-00	METAL GLAZE	22K	5%	1/10W
R834	1-216-097-00	METAL GLAZE	100K	5%	1/10W
R835	1-216-057-00	METAL GLAZE	2.2K	5%	1/10W
R837	1-216-695-11	METAL CHIP	68K	0.50%	1/10W
R838	1-216-099-00	METAL GLAZE	120K	5%	1/10W

REF.NO.	PART NO.	DESCRIPTION			REMARK
R846	1-216-671-11	METAL CHIP	6.8K	0.50%	1/10W
R847	1-216-699-11	METAL CHIP	100K	0.50%	1/10W
R867	1-216-113-00	METAL GLAZE	470K	5%	1/10W
R884	1-216-693-11	METAL CHIP	56K	0.50%	1/10W
R891	1-216-075-00	METAL GLAZE	12K	5%	1/10W

****

*A-1642-097-A D BOARD, COMPLETE
****

4-201-023-01 SPACER, INSULATING
*4-368-683-21 SPRING, TRANSISTOR
4-389-343-21 SPRING, IC
4-812-134-00 RIVET NYLON, 3.5

< CAPACITOR >

C601	1-130-202-00	FILM	0.022MF	10%	400V
C602	1-162-116-00	CERAMIC	680PF	10%	2KV
C603	1-161-742-00	CERAMIC	0.0022MF	20%	400V
C605	1-124-910-11	ELECT	47MF	20%	50V
C608	1-124-903-11	ELECT	1MF	20%	50V
C611	1-102-002-00	CERAMIC	680PF	10%	500V
C612	1-130-481-00	FILM	0.0068MF	5%	50V
C613	1-129-722-00	FILM	0.047MF	10%	630V
C614	1-102-030-00	CERAMIC	330PF	10%	500V
C615	1-124-962-11	ELECT	2200MF	20%	25V
C616	1-162-115-00	CERAMIC	330PF	10%	1KV
C617	1-162-116-00	CERAMIC	680PF	10%	2KV
C618	1-162-134-11	CERAMIC	470PF	10%	2KV
C619	1-102-030-00	CERAMIC	330PF	10%	500V
C620	1-164-299-11	CERAMIC CHIP	0.22MF	10%	25V
C621	1-124-347-00	ELECT	100MF	20%	160V
C622	1-128-320-11	ELECT	2200MF	20%	16V
C623	1-102-030-00	CERAMIC	330PF	10%	500V
C624	1-126-800-51	ELECT	2200MF	20%	25V
C625	1-126-800-51	ELECT	2200MF	20%	25V
C627	1-136-553-11	FILM	0.0015MF	10%	400V
C628	1-124-477-11	ELECT	47MF	20%	25V
C629	1-124-907-11	ELECT	10MF	20%	50V
C631	1-163-075-00	CERAMIC CHIP	0.047MF	10%	25V
C632	1-137-372-11	FILM	0.022MF	5%	50V
C633	1-164-299-11	CERAMIC CHIP	0.22MF	10%	25V
C636	1-130-777-00	FILM	0.1MF	5%	63V
C640	1-124-916-11	ELECT	22MF	20%	50V
C645	1-128-571-11	ELECT	56MF	20%	50V
C646	1-124-798-11	ELECT	1MF	20%	160V
C647	1-124-907-11	ELECT	10MF	20%	50V
C801	1-137-116-11	FILM	1MF	5%	200V
C805	1-124-902-00	ELECT	0.47MF	20%	50V
C808	1-162-114-00	CERAMIC	0.0047MF		2KV
C809	1-124-808-51	ELECT	10MF	20%	200V
C810	1-163-001-11	CERAMIC CHIP	220PF	10%	50V
C812	1-162-318-11	CERAMIC	0.001MF	10%	500V
C813	1-108-704-11	MYLAR	0.1MF	10%	200V
C815	1-162-117-00	CERAMIC	100PF	10%	500V
C819	1-126-103-11	ELECT	470MF	20%	16V
C821	1-137-063-11	FILM	0.018MF	3%	0
C822	1-162-116-00	CERAMIC	680PF	10%	2KV
C824	1-137-366-11	FILM	0.0022MF	5%	50V
C825	1-162-116-00	CERAMIC	680PF	10%	2KV
C826	1-137-515-11	FILM	0.056MF	3%	400V

The components identified by shading and marked ⚠ are critical for safety.
Replace only with the part number specified.

REF.NO.	PART NO.	DESCRIPTION			REMARK
C828	1-136-557-11	FILM	0.0033MF	10%	400V
C830	1-136-189-00	FILM	0.1MF	5%	250V
C831	1-123-932-00	ELECT	4.7MF	20%	160V
C832	1-124-477-11	ELECT	47MF	20%	25V
C833	1-136-126-00	FILM	0.82MF	5%	400V
C834	1-137-114-11	FILM	0.68MF	5%	200V
C835	1-124-480-11	ELECT	470MF	20%	25V
C836	1-102-228-00	CERAMIC	470PF	10%	500V
C837	1-129-702-00	FILM	0.001MF	10%	400V
C838	1-108-704-11	MYLAR	0.1MF	10%	200V
C839	1-123-950-00	ELECT	47MF	20%	250V
C840	1-124-480-11	ELECT	470MF	20%	25V
C841	1-102-228-00	CERAMIC	470PF	10%	500V
C842	1-136-208-11	FILM	0.068MF	10%	250V
C843	1-124-907-11	ELECT	10MF	20%	50V
C846	1-123-024-21	ELECT	33MF		160V
C851	1-137-364-11	FILM	0.001MF	5%	50V
C854	1-161-754-00	CERAMIC	0.001MF	10%	2KV
C863	1-106-383-00	MYLAR	0.047MF	10%	100V
C869	1-130-777-00	FILM	0.1MF	5%	63V
C875	1-102-038-00	CERAMIC	0.001MF		500V
C877	1-124-902-00	ELECT	0.47MF	20%	50V
C878	1-164-232-11	CERAMIC CHIP	0.01MF	10%	50V
C879	1-102-228-00	CERAMIC	470PF	10%	500V
C882	1-106-383-00	MYLAR	0.047MF	10%	100V
C1501	1-163-141-00	CERAMIC CHIP	0.001MF	5%	50V
C1502	1-124-903-11	ELECT	1MF	20%	50V
C1503	1-163-141-00	CERAMIC CHIP	0.001MF	5%	50V
C1504	1-124-480-11	ELECT	470MF	20%	25V
C1505	1-124-911-11	ELECT	220MF	20%	50V
C1506	1-130-777-00	FILM	0.1MF	5%	63V
C1507	1-137-423-11	MYLAR	0.15MF	10%	100V
C1508	1-124-480-11	ELECT	470MF	20%	25V
C1509	1-124-767-00	ELECT	2.2MF	20%	50V
C1511	1-124-907-11	ELECT	10MF	20%	50V
C1512	1-124-006-11	ELECT	10MF	20%	25V
C1514	1-164-004-11	CERAMIC CHIP	0.1MF	10%	25V
C1515	1-164-004-11	CERAMIC CHIP	0.1MF	10%	25V
		< CONNECTOR >			
CN0004	1-508-786-00	PIN, CONNECTOR (5MM PITCH) 2P			
CN0009	1-568-878-51	PIN, CONNECTOR 3P			
CN0504	1-564-511-11	PLUG, CONNECTOR 8P			
CN0505	*1-568-880-51	PIN, CONNECTOR 5P			
CN0506	*1-568-880-51	PIN, CONNECTOR 5P			
CN0519	*1-568-878-51	PIN, CONNECTOR 3P			
CN0521	1-508-765-00	PIN, CONNECTOR (5MM PITCH) 3P			
CN0523	1-573-296-11	CONNECTOR, BOARD TO BOARD 10P			
CN0524	*1-568-878-51	PIN, CONNECTOR 3P			
CN0525	*1-695-294-11	PIN, CONNECTOR (PC BOARD) 6P			
CN0526	*1-568-881-51	PIN, CONNECTOR 6P			
CN0529	1-508-784-00	PIN, CONNECTOR (5MM PITCH) 1P			
CN0544	1-573-296-11	CONNECTOR, BOARD TO BOARD 10P			
CN5521	*1-568-878-51	PIN, CONNECTOR 3P			
DY1	*1-580-798-11	CONNECTOR PIN (DY) 6P			
		< DIODE >			
D601	8-719-914-44	DIODE DAP202K			
D602	8-719-302-43	DIODE EL1Z			
D604	8-719-110-39	DIODE RD15ESB1			
D605	8-719-975-56	DIODE 1SS120A			
D606	8-719-302-43	DIODE EL1Z			
D607	8-719-302-43	DIODE EL1Z			
D608	8-719-300-33	DIODE RU-3AM			
D610	1-806-660-11	DIODE ESAB85-009			
D611	8-719-029-04	DIODE D5L60			
D612	8-719-510-09	DIODE D10SC6M			
D613	8-719-920-68	DIODE ESAB92-02			
D614	8-719-920-68	DIODE ESAB92-02			
D616	8-719-110-31	DIODE RD12ESB2			
D619	8-719-914-43	DIODE DAN202K			
D620	8-719-901-33	DIODE 1SS133			
D621	8-719-302-43	DIODE EL1Z			
D624	8-719-312-39	DIODE R2K-V1			
D801	8-719-018-82	DIODE RGP02-20EL-6394			
D802	8-719-302-43	DIODE EL1Z			
D803	8-719-982-27	DIODE MTZJ-33C			
D809	8-719-110-03	DIODE RD7.5ESB2			
D811	8-719-300-33	DIODE ERB44-06TP1			
D812	8-719-908-03	DIODE GP08D			
D813	8-719-908-03	DIODE GP08D			
D814	8-719-979-85	DIODE EGP20G			
D815	8-719-302-43	DIODE EL1Z			
D816	8-719-979-85	DIODE EGP20G			
D822	8-719-982-20	DIODE MTZJ-30B			
D824	8-719-028-72	DIODE RGP02-17EL-6433			
D825	8-719-914-43	DIODE DAN202K			
D826	8-719-914-43	DIODE DAN202K			
D828	8-719-901-33	DIODE 1SS133			
D1501	8-719-914-43	DIODE DAN202K			
D1503	8-719-908-03	DIODE GP08D			
D1504	8-719-982-03	DIODE MTZJ-3.6A			
		< IC >			
IC601	8-759-073-29	IC TDA4605-3			
IC602	8-759-908-15	IC TL431CLP			
IC603 ⚠	8-749-923-44	IC SPH617G-1			
IC801	8-759-103-93	IC UPC393C			
IC803	8-759-081-31	IC MC78L12ACPRP			
IC1501	8-759-192-71	IC STV9379			
	4-202-373-01	SPRING, IC (IC1501)			
		< COIL >			
L602	1-410-397-21	FERRITE BEAD INDUCTOR	1.1UH		
L603	1-410-396-41	FERRITE BEAD INDUCTOR	0.45UH		
L604	1-410-396-41	FERRITE BEAD INDUCTOR	0.45UH		
L605	1-412-528-11	INDUCTOR	18UH		
L606	1-412-528-11	INDUCTOR	18UH		
L610	1-410-397-21	FERRITE BEAD INDUCTOR	1.1UH		
L622	1-412-533-21	INDUCTOR	47UH		
L623	1-412-533-21	INDUCTOR	47UH		
L802	1-408-947-00	INDUCTOR	2.2MMH		
L803	1-420-872-00	COIL, AIR CORE			
L804	1-410-396-41	FERRITE BEAD INDUCTOR	0.45UH		
L807	1-412-540-31	INDUCTOR	180UH		
L808	1-412-552-31	INDUCTOR	2.2MMH		
L809	1-459-104-00	COIL, WITH CORE			
L810	1-460-197-21	COIL, FERRITE (PMC)			
L811	1-412-519-11	INDUCTOR	3.3UH		
L812	1-412-519-11	INDUCTOR	3.3UH		
L813	1-412-519-11	INDUCTOR	3.3UH		

The components identified by shading and marked ⚠ are critical for safety.
Replace only with the part number specified.

D

REF.NO.	PART NO.	DESCRIPTION				REMARK
L817	1-423-963-11	TRANSFORMER, LINEARITY (HLT)				
L818	1-459-104-00	COIL, WITH CORE				
L1501	1-412-525-21	INDUCTOR	10UH			
L1502	1-412-525-21	INDUCTOR	10UH			
L1503	1-412-525-21	INDUCTOR	10UH			
		< IC LINK >				
PS601 ⚠	1-532-686-91	LINK, IC 2.7A (ICP-N50)				
PS602 ⚠	1-532-686-91	LINK, IC 2.7A (ICP-N50)				
PS603 ⚠	1-532-686-91	LINK, IC 2.7A (ICP-N50)				
PS604 ⚠	1-532-686-91	LINK, IC 2.7A (ICP-N50)				
		< TRANSISTOR >				
Q601	8-729-016-14	TRANSISTOR BUZ91A-E3155				
	4-200-001-01	HOLDER, IC (Q601)				
Q602	8-729-177-22	TRANSISTOR 2SB772-Q				
Q603	8-729-900-53	TRANSISTOR DTC114EK				
Q604	8-729-209-15	TRANSISTOR 2SD2012				
Q605	8-729-255-12	TRANSISTOR 2SC2551-0				
Q606	8-729-216-22	TRANSISTOR 2SA1162-G				
Q611	8-729-119-78	TRANSISTOR 2SC2785-HFE				
Q612	8-729-903-29	TRANSISTOR DTA144TK				
Q613	8-729-216-22	TRANSISTOR 2SA1162-G				
Q801	8-729-016-32	TRANSISTOR 2SC4927-01				
	4-202-373-01	SPRING, IC (Q801)				
Q802	8-729-140-97	TRANSISTOR 2SB734-34				
Q806	8-729-019-71	TRANSISTOR 2SK1916-53-F50				
Q807	8-729-119-80	TRANSISTOR 2SC2688-LK				
Q813	8-729-140-96	TRANSISTOR 2SD774-34				
Q1501	8-729-920-74	TRANSISTOR 2SC2412K-QR				
Q1502	8-729-901-01	TRANSISTOR DTC144EK				
Q1503	8-729-216-22	TRANSISTOR 2SA1162-G				
Q1504	8-729-901-01	TRANSISTOR DTC144EK				
		< RESISTOR >				
FS046	1-249-399-11	CARBON	33	5%	1/4W	F
R602	1-216-081-00	METAL GLAZE	22K	5%	1/10W	
R603	1-215-901-00	METAL OXIDE	33K	5%	2W	F
R604	1-260-200-11	CARBON	240K	5%	1/2W	
R605	1-216-295-91	METAL GLAZE	0	5%	1/10W	
R606	1-216-035-00	METAL GLAZE	270	5%	1/10W	
R607	1-216-210-00	METAL GLAZE	3.3K	5%	1/8W	
R608	1-215-903-11	METAL OXIDE	68K	5%	2W	F
R609	1-249-395-11	CARBON	15	5%	1/4W	
R610	1-247-881-00	CARBON	120K	5%	1/4W	
R611	1-215-887-00	METAL OXIDE	150	5%	2W	F
R612	1-260-131-11	CARBON	470K	5%	1/2W	
R613	1-216-259-00	METAL GLAZE	360K	5%	1/8W	
R614	1-216-488-11	METAL OXIDE	18K	5%	3W	F
R615	1-216-488-11	METAL OXIDE	18K	5%	3W	F
R618	1-216-449-11	METAL OXIDE	56	5%	2W	F
R620	1-216-045-00	METAL GLAZE	680	5%	1/10W	
R621	1-216-659-11	METAL CHIP	2.2K	0.50%	1/10W	
R622	1-216-041-00	METAL GLAZE	470	5%	1/10W	
R623	1-216-073-00	METAL GLAZE	10K	5%	1/10W	
R625	1-216-449-11	METAL OXIDE	56	5%	2W	F
R626	1-216-635-11	METAL CHIP	220	0.50%	1/10W	
R627	1-249-398-11	CARBON	27	5%	1/4W	F
R629	1-215-464-00	METAL	62K	1%	1/4W	
R630	1-249-421-11	CARBON	2.2K	5%	1/4W	
R631	1-216-398-11	METAL OXIDE	5.6	5%	3W	F
R633	1-249-415-11	CARBON	680	5%	1/4W	
R634	1-215-477-00	METAL	220K	1%	1/4W	
R635	1-216-073-00	METAL GLAZE	10K	5%	1/10W	
R636	1-215-925-11	METAL OXIDE	22K	5%	3W	F
R637	1-216-113-00	METAL GLAZE	470K	5%	1/10W	
R638	1-216-073-00	METAL GLAZE	10K	5%	1/10W	
R639	1-216-089-91	METAL GLAZE	47K	5%	1/10W	
R640	1-207-905-00	WIREWOUND	0.27	10%	2W	F
R642	1-216-374-00	METAL OXIDE	2.7	5%	2W	F
R643	1-249-417-11	CARBON	1K	5%	1/4W	
R645	1-215-464-00	METAL	62K	1%	1/4W	
R646	1-216-097-00	METAL GLAZE	100K	5%	1/10W	
R647	1-216-059-00	METAL GLAZE	2.7K	5%	1/10W	
R648	1-249-424-11	CARBON	3.9K	5%	1/4W	
R649	1-216-270-00	METAL GLAZE	1M	5%	1/8W	
R650	1-216-113-00	METAL GLAZE	470K	5%	1/10W	
R651	1-216-069-00	METAL GLAZE	6.8K	5%	1/10W	
R652	1-216-109-00	METAL GLAZE	330K	5%	1/10W	
R653	1-216-065-00	METAL GLAZE	4.7K	5%	1/10W	
R654	1-215-904-11	METAL OXIDE	100K	5%	2W	F
R655	1-216-065-00	METAL GLAZE	4.7K	5%	1/10W	
R656	1-216-033-00	METAL GLAZE	220	5%	1/10W	
R657	1-247-811-31	CARBON	150	5%	1/4W	
R801	1-216-671-11	METAL CHIP	6.8K	0.50%	1/10W	
R804	1-217-778-11	FUSIBLE	1K	5%	1W	F
R807	1-216-037-00	METAL GLAZE	330	5%	1/10W	
R811	1-216-033-00	METAL GLAZE	220	5%	1/10W	
R812	1-216-061-00	METAL GLAZE	3.3K	5%	1/10W	
R818	1-216-685-11	METAL CHIP	27K	0.50%	1/10W	
R819	1-247-755-11	CARBON	1.8K	5%	1/2W	F
R821	1-216-481-11	METAL OXIDE	1.2K	5%	3W	F
R822	1-216-481-11	METAL OXIDE	1.2K	5%	3W	F
R823	1-216-065-00	METAL GLAZE	4.7K	5%	1/10W	
R825	1-216-342-11	METAL OXIDE	0.27	5%	1W	F
R826	1-216-166-00	METAL GLAZE	47	5%	1/8W	
R833	1-216-105-00	METAL GLAZE	220K	5%	1/10W	
R836	1-216-242-91	METAL GLAZE	68K	5%	1/8W	
R839	1-216-665-11	METAL CHIP	3.9K	0.50%	1/10W	
R840	1-216-097-00	METAL GLAZE	100K	5%	1/10W	
R841	1-249-397-11	CARBON	22	5%	1/4W	F
R842	1-216-454-11	METAL OXIDE	390	5%	2W	F
R848	1-215-885-00	METAL OXIDE	68	5%	2W	F
R849	1-215-884-11	METAL OXIDE	47	5%	2W	F
R851	1-247-743-11	CARBON	220	5%	1/2W	F
R852	1-249-389-11	CARBON	4.7	5%	1/4W	F
R853	1-249-443-11	CARBON	0.47	5%	1/4W	F
R854	1-249-443-11	CARBON	0.47	5%	1/4W	F
R855	1-202-826-00	SOLID	4.7K	20%	1/2W	
R858	1-249-423-11	CARBON	3.3K	5%	1/4W	
R864	1-216-686-11	METAL CHIP	30K	0.50%	1/10W	
R868	1-249-426-11	CARBON	5.6K	5%	1/4W	
R871	1-214-907-00	METAL	56K	1%	1/2W	
R872	1-249-393-11	CARBON	10	5%	1/4W	F
R873	1-249-393-11	CARBON	10	5%	1/4W	F
R876	1-249-421-11	CARBON	2.2K	5%	1/4W	
R877	1-215-907-11	METAL OXIDE	22	5%	3W	F
R889	1-216-089-91	METAL GLAZE	47K	5%	1/10W	
R893	1-215-878-00	METAL OXIDE	33K	5%	1W	F
R894	1-216-264-00	METAL GLAZE	560K	5%	1/8W	
R895	1-216-095-00	METAL GLAZE	82K	5%	1/10W	

D VM

The components identified by shading and marked ⚠ are critical for safety.
Replace only with the part number specified.

REF.NO.	PART NO.	DESCRIPTION				REMARK
R897	1-216-089-91	METAL GLAZE	47K	5%	1/10W	
R898	1-216-262-00	METAL GLAZE	470K	5%	1/8W	
R899	1-249-377-11	CARBON	0.47	5%	1/4W	F
R1501	1-216-676-11	METAL CHIP	11K	0.50%	1/10W	
R1502	1-216-666-11	METAL CHIP	4.3K	0.50%	1/10W	
R1503	1-216-065-00	METAL GLAZE	4.7K	5%	1/10W	
R1504	1-216-081-00	METAL GLAZE	22K	5%	1/10W	
R1505	1-216-081-00	METAL GLAZE	22K	5%	1/10W	
R1506	1-216-053-00	METAL GLAZE	1.5K	5%	1/10W	
R1506	1-216-057-00	METAL GLAZE	2.2K	5%	1/10W	
R1508	1-216-683-11	METAL CHIP	22K	0.50%	1/10W	
R1509	1-216-689-11	METAL CHIP	39K	0.50%	1/10W	
R1510	1-249-382-11	CARBON	1.2	5%	1/4W	F
R1511	1-215-888-00	METAL OXIDE	220	5%	2W	F
R1512	1-216-370-11	METAL OXIDE	1.2	5%	2W	F
R1514	1-216-049-00	METAL GLAZE	1K	5%	1/10W	
R1550	1-216-113-00	METAL GLAZE	470K	5%	1/10W	
R1551	1-216-065-00	METAL GLAZE	4.7K	5%	1/10W	
R1552	1-216-113-00	METAL GLAZE	470K	5%	1/10W	
		< VARIABLE RESISTOR >				
RV601	1-241-628-11	RES, ADJ, CARBON 2.2K				
		< TRANSFORMER >				
T601 ⚠	1-423-738-11	S.R.T (SMT89)				
T801 ⚠	1-453-171-11	TRANSFORMER ASSY, FLYBACK (UX-2602A2)				
T803	1-437-090-00	HDT				
T895	1-413-059-00	TRANSFORMER, FERRITE (DFT)				
**********						
*A-1644-040-A		VM BOARD, COMPLETE				
		**********				
		< CAPACITOR >				
C1701	1-124-119-00	ELECT	330MF	20%	16V	
C1702	1-101-880-00	CERAMIC	47PF	5%	50V	
C1703	1-102-115-00	CERAMIC	560PF	10%	50V	
C1704	1-161-830-00	CERAMIC	0.0047MF		500V	
C1705	1-124-120-11	ELECT	220MF	20%	16V	
C1706	1-123-935-00	ELECT	33MF	20%	160V	
C1707	1-124-907-11	ELECT	10MF	20%	50V	
C1708	1-101-006-00	CERAMIC	0.047MF		50V	
C1709	1-108-704-11	MYLAR	0.1MF	10%	200V	
C1710	1-136-207-11	FILM	0.047MF	10%	250V	
C1711	1-162-318-11	CERAMIC	0.001MF	10%	500V	
C1712	1-124-799-11	ELECT	2.2MF	20%	160V	
C1713	1-162-318-11	CERAMIC	0.001MF	10%	500V	
C1714	1-136-207-11	FILM	0.047MF	10%	250V	
C1716	1-124-907-11	ELECT	10MF	20%	50V	
C1718	1-124-120-11	ELECT	220MF	20%	16V	
C1719	1-124-927-11	ELECT	4.7MF	20%	50V	
		< CONNECTOR >				
CN1819	*1-568-882-51	PIN, CONNECTOR 7P				
		< DIODE >				
D1701	8-719-901-33	DIODE 1SS133				
D1702	8-719-901-33	DIODE 1SS133				
D1703	8-719-901-33	DIODE 1SS133				
D1704	8-719-982-37	DIODE MTZJ-39C				
D1705	8-719-982-37	DIODE MTZJ-39C				
D1706	8-719-901-33	DIODE 1SS133				
D1707	8-719-901-33	DIODE 1SS133				
		< COIL >				
L1702	1-408-418-00	INDUCTOR	56UH			
		< TRANSISTOR >				
Q1701	8-729-119-78	TRANSISTOR 2SC2785-HFE				
Q1702	8-729-173-38	TRANSISTOR 2SA733-K				
Q1703	8-729-017-05	TRANSISTOR 2SA1837				
	*4-368-683-21	SPRING, TRANSISTOR (Q1703)				
Q1704	8-729-119-78	TRANSISTOR 2SC2785-HFE				
Q1705	8-729-017-06	TRANSISTOR 2SC4793				
	*4-368-683-21	SPRING, TRANSISTOR (Q1705)				
Q1706	8-729-119-78	TRANSISTOR 2SC2785-HFE				
Q1707	8-729-140-96	TRANSISTOR 2SD774-34				
Q1708	8-729-901-59	TRANSISTOR BF199				
Q1709	8-729-255-12	TRANSISTOR 2SC2551-O				
		< RESISTOR >				
R1701	1-247-807-31	CARBON	100	5%	1/4W	
R1702	1-249-420-11	CARBON	1.8K	5%	1/4W	
R1703	1-247-807-31	CARBON	100	5%	1/4W	
R1704	1-249-420-11	CARBON	1.8K	5%	1/4W	
R1705	1-247-736-11	CARBON	56	5%	1/4W	F
R1706	1-249-414-11	CARBON	560	5%	1/4W	F
R1707	1-249-412-11	CARBON	390	5%	1/4W	
R1709	1-249-416-11	CARBON	820	5%	1/4W	
R1710	1-249-385-11	CARBON	2.2	5%	1/4W	F
R1711	1-249-432-11	CARBON	18K	5%	1/4W	
R1712	1-249-435-11	CARBON	33K	5%	1/4W	
R1713	1-249-438-11	CARBON	56K	5%	1/4W	
R1714	1-249-429-11	CARBON	10K	5%	1/4W	
R1715	1-216-476-11	METAL OXIDE	180	5%	3W	F
R1716	1-249-417-11	CARBON	1K	5%	1/4W	F
R1717	1-249-432-11	CARBON	18K	5%	1/4W	
R1718	1-249-410-11	CARBON	270	5%	1/4W	
R1719	1-249-419-11	CARBON	1.5K	5%	1/4W	
R1720	1-249-441-11	CARBON	100K	5%	1/4W	
R1721	1-249-414-11	CARBON	560	5%	1/4W	
R1722	1-249-385-11	CARBON	2.2	5%	1/4W	F
R1723	1-249-429-11	CARBON	10K	5%	1/4W	
R1724	1-249-436-11	CARBON	39K	5%	1/4W	
R1725	1-249-417-11	CARBON	1K	5%	1/4W	
R1726	1-249-411-11	CARBON	330	5%	1/4W	
R1727	1-249-402-11	CARBON	56	5%	1/4W	F
R1729	1-216-451-11	METAL OXIDE	120	5%	2W	F
R1731	1-249-420-11	CARBON	1.8K	5%	1/4W	
R1732	1-249-426-11	CARBON	5.6K	5%	1/4W	
R1734	1-249-419-11	CARBON	1.5K	5%	1/4W	

The components identified by shading and marked ⚠ are critical for safety.
Replace only with the part number specified.

H1 H2 K1 J

REF.NO.	PART NO.	DESCRIPTION			REMARK
	*1-648-314-11	H1 BOARD			
		********			
		< SOCKET >			
	1-562-837-11	JACK			
	1-568-678-11	TERMINAL BLOCK, S 3P			
		< CAPACITOR >			
C083	1-163-037-11	CERAMIC CHIP 0.022MF	10%	25V	
C087	1-163-037-11	CERAMIC CHIP 0.022MF	10%	25V	
		< CONNECTOR >			
CN1008	*1-564-513-11	PLUG, CONNECTOR 10P			
CN1018	*1-568-878-51	PIN, CONNECTOR 3P			
		< COIL >			
L081	1-408-409-00	INDUCTOR 10UH			
L082	1-408-409-00	INDUCTOR 10UH			
		< RESISTOR >			
JR021	1-216-295-91	METAL GLAZE 0	5%	1/10W	
R081	1-216-073-00	METAL GLAZE 10K	5%	1/10W	
R082	1-216-065-00	METAL GLAZE 4.7K	5%	1/10W	
R083	1-216-057-00	METAL GLAZE 2.2K	5%	1/10W	
R084	1-216-202-00	METAL GLAZE 1.5K	5%	1/8W	
R085	1-216-202-00	METAL GLAZE 1.5K	5%	1/8W	
		< SWITCH >			
S081	1-571-532-21	SWITCH, TACTIL			
S082	1-571-532-21	SWITCH, TACTIL			
S083	1-571-532-21	SWITCH, TACTIL			
**********					
	*1-652-942-11	H2 BOARD			
		********			
	*4-201-076-01	HOLDER, LED			
	*4-374-987-01	GUIDE, LIGHT			
	4-381-686-01	BRACKET (B), LIGHT GUIDE			
		< CONNECTOR >			
CN1132	*1-568-882-51	PIN, CONNECTOR 7P			
		< DIODE >			
D092	8-719-948-31	DIODE LD-201VR			
D093	8-719-948-31	DIODE LD-201VR			
D094	8-719-948-31	DIODE LD-201VR			
		< IC >			
IC091	8-741-101-75	IC SBX1610-11			
		< RESISTOR >			
JR160	1-216-296-91	METAL GLAZE 0	5%	1/8W	
JR161	1-216-296-91	METAL GLAZE 0	5%	1/8W	
R091	1-216-190-00	METAL GLAZE 470	5%	1/8W	

REF.NO.	PART NO.	DESCRIPTION			REMARK
	*A-1649-009-A	K1 BOARD, COMPLETE			
		**********			
	4-201-023-01	SPACER, INSULATING			
	4-202-373-01	SPRING, IC			
		< CAPACITOR >			
C261	1-163-005-11	CERAMIC CHIP 470PF	10%	50V	
C262	1-124-925-11	ELECT 2.2MF	20%	50V	
C263	1-164-161-11	CERAMIC CHIP 0.0022MF	10%	50V	
C264	1-124-916-11	ELECT 22MF	20%	50V	
C265	1-101-006-00	CERAMIC 0.047MF		50V	
C266	1-130-772-00	FILM 0.22MF	5%	63V	
C267	1-124-618-11	ELECT 2200MF	20%	35V	
C268	1-124-618-11	ELECT 2200MF	20%	35V	
C271	1-130-772-00	FILM 0.22MF	5%	63V	
C272	1-124-925-11	ELECT 2.2MF	20%	50V	
C273	1-164-161-11	CERAMIC CHIP 0.0022MF	10%	50V	
C275	1-124-916-11	ELECT 22MF	20%	50V	
		< CONNECTOR >			
CN1312	1-508-784-00	PIN, CONNECTOR (5MM PITCH) 1P			
CN1346	*1-564-506-11	PLUG, CONNECTOR 3P			
CN1349	*1-564-507-11	PLUG, CONNECTOR 4P			
		< DIODE >			
D261	8-719-901-33	DIODE 1SS133			
D262	8-719-901-33	DIODE 1SS133			
D263	8-719-901-33	DIODE 1SS133			
D264	8-719-901-33	DIODE 1SS133			
D265	8-719-901-33	DIODE 1SS133			
D266	8-719-901-33	DIODE 1SS133			
		< IC >			
IC270	8-759-072-99	IC TDA2052			
IC280	8-759-072-99	IC TDA2052			
		< RESISTOR >			
R261	1-216-081-00	METAL GLAZE 22K	5%	1/10W	
R262	1-216-049-00	METAL GLAZE 1K	5%	1/10W	
R263	1-216-081-00	METAL GLAZE 22K	5%	1/10W	
R264	1-216-081-00	METAL GLAZE 22K	5%	1/10W	
R265	1-216-045-00	METAL GLAZE 680	5%	1/10W	
R266	1-216-041-00	METAL GLAZE 470	5%	1/10W	
R267 ⚠	1-217-477-00	FUSIBLE 4.7	5%	1W	F
R268 ⚠	1-217-477-00	FUSIBLE 4.7	5%	1W	F
R269	1-216-081-00	METAL GLAZE 22K	5%	1/10W	
R270	1-216-041-00	METAL GLAZE 470	5%	1/10W	
R271	1-216-049-00	METAL GLAZE 1K	5%	1/10W	
R272	1-216-081-00	METAL GLAZE 22K	5%	1/10W	
R273	1-216-081-00	METAL GLAZE 22K	5%	1/10W	
R274	1-216-045-00	METAL GLAZE 680	5%	1/10W	
**********					
	*A-1651-064-A	J BOARD, COMPLETE			
		**********			
		< CAPACITOR >			
C281	1-124-119-00	ELECT 330MF	20%	16V	
C295	1-163-009-11	CERAMIC CHIP 0.001MF	10%	50V	

REF.NO.	PART NO.	DESCRIPTION		REMARK
C296	1-163-009-11	CERAMIC CHIP 0.001MF	10%	50V
C906	1-101-004-00	CERAMIC 0.01MF		50V
C910	1-163-017-00	CERAMIC CHIP 0.0047MF	10%	50V
C911	1-163-017-00	CERAMIC CHIP 0.0047MF	10%	50V
C912	1-163-133-00	CERAMIC CHIP 470PF	5%	50V
C913	1-163-133-00	CERAMIC CHIP 470PF	5%	50V
C914	1-163-121-00	CERAMIC CHIP 150PF	5%	50V
C915	1-163-121-00	CERAMIC CHIP 150PF	5%	50V
C916	1-163-017-00	CERAMIC CHIP 0.0047MF	10%	50V
C917	1-163-017-00	CERAMIC CHIP 0.0047MF	10%	50V
C922	1-124-477-11	ELECT 47MF	20%	16V
C923	1-164-346-11	CERAMIC CHIP 1MF		16V
C924	1-124-477-11	ELECT 47MF	20%	16V
C925	1-124-477-11	ELECT 47MF	20%	16V
C926	1-164-346-11	CERAMIC CHIP 1MF		16V
C927	1-124-477-11	ELECT 47MF	20%	16V
C928	1-124-477-11	ELECT 47MF	20%	16V
C929	1-124-477-11	ELECT 47MF	20%	16V
C930	1-124-477-11	ELECT 47MF	20%	16V
C931	1-164-346-11	CERAMIC CHIP 1MF		16V
C932	1-164-346-11	CERAMIC CHIP 1MF		16V
		< CONNECTOR >		
CN1209	1-695-302-11	CONNECTOR, BOARD TO BOARD 50P		
CN1210	*1-564-522-11	PLUG, CONNECTOR 7P		
CN1233	*1-564-518-11	PLUG, CONNECTOR 3P		
CN1240	*1-564-519-11	PLUG, CONNECTOR 4P		
		< DIODE >		
D903	8-719-921-69	DIODE MTZJ-9.1		
D904	8-719-921-69	DIODE MTZJ-9.1		
D907	8-719-921-69	DIODE MTZJ-9.1		
D908	8-719-921-69	DIODE MTZJ-9.1		
D909	8-719-921-69	DIODE MTZJ-9.1		
D910	8-719-921-69	DIODE MTZJ-9.1		
D911	8-719-921-69	DIODE MTZJ-9.1		
D912	8-719-921-69	DIODE MTZJ-9.1		
D913	8-719-921-69	DIODE MTZJ-9.1		
D914	8-719-921-69	DIODE MTZJ-9.1		
D915	8-719-921-69	DIODE MTZJ-9.1		
D916	8-719-921-69	DIODE MTZJ-9.1		
D917	8-719-921-69	DIODE MTZJ-9.1		
D924	8-719-921-69	DIODE MTZJ-9.1		
D925	8-719-921-69	DIODE MTZJ-9.1		
D926	8-719-921-69	DIODE MTZJ-9.1		
D927	8-719-921-69	DIODE MTZJ-9.1		
D928	8-719-921-69	DIODE MTZJ-9.1		
D999	8-719-110-39	DIODE RD15ESB1		
		< SOCKET >		
J291	1-537-505-11	TERMINAL BOARD (2P)		
J903	1-561-534-41	SOCKET, PIN 21P		
J903	1-695-550-11	SOCKET 21P		
J905	1-695-293-11	SOCKET 21P		
		< TRANSISTOR >		
Q281	8-729-920-74	TRANSISTOR 2SC2412K-QR		
Q282	8-729-920-74	TRANSISTOR 2SC2412K-QR		

REF.NO.	PART NO.	DESCRIPTION			REMARK
		< RESISTOR >			
JR901	1-216-295-91	METAL GLAZE	0	5%	1/10W
JR906	1-216-295-91	METAL GLAZE	0	5%	1/10W
JR915	1-216-295-91	METAL GLAZE	0	5%	1/10W
JR917	1-216-296-91	METAL GLAZE	0	5%	1/8W
JR918	1-216-295-91	METAL GLAZE	0	5%	1/10W
JR919	1-216-296-91	METAL GLAZE	0	5%	1/8W
JR920	1-216-295-91	METAL GLAZE	0	5%	1/10W
JR921	1-216-295-91	METAL GLAZE	0	5%	1/10W
JR924	1-216-296-91	METAL GLAZE	0	5%	1/8W
JR926	1-216-296-91	METAL GLAZE	0	5%	1/8W
JR927	1-216-296-91	METAL GLAZE	0	5%	1/8W
JR928	1-216-296-91	METAL GLAZE	0	5%	1/8W
JR935	1-216-296-91	METAL GLAZE	0	5%	1/8W
JR940	1-216-296-91	METAL GLAZE	0	5%	1/8W
JR942	1-216-296-91	METAL GLAZE	0	5%	1/8W
JR952	1-216-296-91	METAL GLAZE	0	5%	1/8W
JR954	1-216-295-91	METAL GLAZE	0	5%	1/10W
JR955	1-216-296-91	METAL GLAZE	0	5%	1/8W
JR956	1-216-295-91	METAL GLAZE	0	5%	1/10W
JR957	1-216-295-91	METAL GLAZE	0	5%	1/10W
R283	1-216-073-00	METAL GLAZE	10K	5%	1/10W
R284	1-216-073-00	METAL GLAZE	10K	5%	1/10W
R287	1-216-216-00	METAL GLAZE	5.6K	5%	1/8W
R288	1-216-216-00	METAL GLAZE	5.6K	5%	1/8W
R289	1-216-063-00	METAL GLAZE	3.9K	5%	1/10W
R290	1-216-216-00	METAL GLAZE	5.6K	5%	1/8W
R291	1-249-413-11	CARBON	470	5%	1/4W
R292	1-249-413-11	CARBON	470	5%	1/4W
R911	1-216-022-00	METAL GLAZE	75	5%	1/10W
R921	1-216-022-00	METAL GLAZE	75	5%	1/10W
R922	1-216-222-00	METAL GLAZE	10K	5%	1/8W
R923	1-216-039-00	METAL GLAZE	390	5%	1/10W
R924	1-216-039-00	METAL GLAZE	390	5%	1/10W
R925	1-216-089-91	METAL GLAZE	47K	5%	1/10W
R926	1-216-039-00	METAL GLAZE	390	5%	1/10W
R927	1-216-039-00	METAL GLAZE	390	5%	1/10W
R928	1-216-089-91	METAL GLAZE	47K	5%	1/10W
R929	1-216-063-00	METAL GLAZE	3.9K	5%	1/10W
R930	1-216-113-00	METAL GLAZE	470K	5%	1/10W
R931	1-216-212-00	METAL GLAZE	3.9K	5%	1/8W
R932	1-216-113-00	METAL GLAZE	470K	5%	1/10W
R933	1-216-073-00	METAL GLAZE	10K	5%	1/10W
R934	1-216-063-00	METAL GLAZE	3.9K	5%	1/10W
R935	1-216-022-00	METAL GLAZE	75	5%	1/10W
R936	1-216-022-00	METAL GLAZE	75	5%	1/10W
R937	1-216-113-00	METAL GLAZE	470K	5%	1/10W
R938	1-216-039-00	METAL GLAZE	390	5%	1/10W
R939	1-216-188-00	METAL GLAZE	390	5%	1/8W
R940	1-216-063-00	METAL GLAZE	3.9K	5%	1/10W
R941	1-216-113-00	METAL GLAZE	470K	5%	1/10W
R942	1-216-188-00	METAL GLAZE	390	5%	1/8W
R943	1-216-089-91	METAL GLAZE	47K	5%	1/10W
R944	1-216-188-00	METAL GLAZE	390	5%	1/8W
R945	1-216-089-91	METAL GLAZE	47K	5%	1/10W
R959	1-216-674-11	METAL CHIP	9.1K	0.50%	1/10W
R960	1-216-674-11	METAL CHIP	9.1K	0.50%	1/10W
R968	1-216-055-00	METAL GLAZE	1.8K	5%	1/10W
R969	1-216-055-00	METAL GLAZE	1.8K	5%	1/10W
R970	1-216-055-00	METAL GLAZE	1.8K	5%	1/10W

The components identified by shading and marked ⚠ are critical for safety.
Replace only with the part number specified.

J

REF.NO.	PART NO.	DESCRIPTION	REMARK
R977	1-216-055-00	METAL GLAZE 1.8K 5% 1/10W	
		**********	
		MISCELLANEOUS	
		**********	
⚠	1-452-509-41	NECK ASSY, PICTURE TUBE (NA-308)	
⚠	1-406-807-11	COIL, DEMAGNETIZATION	
⚠	8-451-422-11	DEFLECTION YOLK (Y29GXA)	
	1-452-032-00	MAGNET, DISK; 10MM	
	1-452-094-00	MAGNET, ROTATABLE DISK; 15MM	
⚠	1-590-762-11	CORD, POWER (WITH PLUG) (A2942U)	
⚠	1-690-296-11	CORD, POWER (WITH NOISE FILTER) (KV-A2941A/A2941D)	
⚠	1-590-460-11	CORD, POWER (WITH CONNECTOR) (KV-A2941B/A2943E/A2941K)	
	1-544-475-21	SPEAKER	
V901 ⚠	8-733-853-05	PICTURE TUBE (M68LCT60X)	
		**********	
		ACCESSORIES AND PACKING MATERIALS	
		**********	
	4-202-736-71	MANUAL, INSTRUCTION (KV-A2943E)	
	4-202-736-41	MANUAL, INSTRUCTION (KV-A2941A)	
	4-202-736-51	MANUAL, INSTRUCTION (KV-A2941B)	
	4-202-736-11	MANUAL, INSTRUCTION (KV-A2941D)	
	4-202-736-91	MANUAL, INSTRUCTION (KV-A2941K)	
	4-202-736-61	MANUAL, INSTRUCTION (KV-A2942U)	
	4-039-906-01	BAG, PROTECTION	
	4-202-502-01	CUSHION (LOWER) (ASSY)	
	4-202-503-01	CUSHION (UPPER) (ASSY)	
	4-202-504-01	INDIVIDUAL CARTON	
		REMOTE COMMANDER	
		**********	
	1-467-272-11	REMOTE COMMANDER RM-831	
	9-903-466-01	POCKET COVER (FOR RM-831)	
		**********	